PACKET MODIFICATIONS

February 10, 2026

Addition of the following update and an item not included in the original packet:

- *Town Administrator Wynn's February 2026 Budget to Actuals*
- *Page 2 of the Public Works Red-Lined Construction Standards*

ACCOUNT	DESCRIPTION		FEBRUARY 9TH ACTUAL
UBB Accounts			
			CURRENT BALANCES
x3637	**Pooled Cash** - 4.00% Interest Rate	$	3,434,076.51
x0857	**Conservation Trust Fund** - 0.1% Interest Rate	$	17,638.25
x3858	**Grant Pass Through** - 0.00% Interest Rate (May Close Account)	$	25,025.00
x0571	**Internal Grants** - 0.00% Interest Rate (Needed to Receive Grants from State)	$	99,756.24
x0733	**Operating** (Main Account) - 0.00% Interest Rate	$	141,520.58
x3629	**Payroll** - 0.00% Interest Rate	$	7,266.10
	Subgroup : Total UBB Accounts	**$**	**3,725,282.68**
ColoTrust Investment Accounts			
x8001	**General Fund** - 4.0855% 30-Day Yield	$	561,276.16
	$69,500 is the TABOR reserve required by state statute	$	69,500.00
x8002	**Sewer Restricted** - 4.0855% 30-Day Yield	$	527,762.27
	$100,750 must be maintained in Reserve for 2020 Revenue Refunding Bonds	$	100,750.00
x8003	**Debt Reserve** - 4.0855% 30-Day Yield	$	126,642.76
x8004	**Bridge Reserve** - 4.0855% 30-Day Yield	$	697,493.42
x8005	**Water** - 4.0855% 30-Day Yield	$	522,943.26
	Subgroup : ColoTrust Investment Accounts	**$**	**2,606,367.87**
		TOTAL BANK ACCOUNTS	**$3,725,282.68**
		TOTAL INVESTMENT ACCOUNTS	**$2,606,367.87**
Last Month Total All Accounts: $6,722,401.38			
	TOTAL CURRENT BALANCE ALL ACCOUNTS		**$6,331,650.55**

Grant Description	Granting Agency	Total Award	Date Awarded	Amount Rec'd.	Contract Expiration	Revenue Account	Expenditure Account	Consultant/ Contractor	Total Contract Price	Remaining Balance of Grant
EIAF - A00278 Paonia Code Revision	DOLA	$ 25,000.00	11/27/2023	$ 15,291.85	11/27/2024	10-35-20	10-41-75	Sustainable Futures	$ 38,000.00	$ 9,708.15
EIAF-25-039 (Tier II) - 25039 Paonia Westernloop Water Main Replacement	DOLA	$ 1,000,000.00	3/18/2025	$ -	3/18/2026	30-36-30	60-50-70	TBD	TBD	$ 1,000,000.00
HPLN-H25017 - Town of Paonia Housing Needs Assessment SB Update	DOLA	$ 7,500.00	8/26/2025	$ -	8/26/2026	10-35-20	10-41-75	Urban Rural Continuum	TBD	$ 7,500.00
EIAF (Tier II) - 9721 Paonia Water Tank Relining	DOLA	$ 956,000.00	4/3/2024	$ 584,350.77	10/31/2025	60-36-30	60-50-70	Earthworx for Sitework - viaflex for Temp. tank - MPC for Relining	TBD	$ 371,649.23
SAFE PATHWAYS FOR PAONIA - 5TH AND GRAND REALIGNMENT										
RMS - M035-003 (25364) Safe Pathways for Paonia (5th & Grand)	CDOT	$ 1,040,774.00	10/20/2023	$ -	8/27/2033	10-35-20	10-45-70	TBD	TBD	$ 1,040,774.00
SRTS -	CDOT	$ 872,825.00	4/16/2025	$ -	TBD	10-35-20	10-45-70	TBD	TBD	$ 872,825.00
BUILD Grant	FHWA	$ 1,884,901.00	7/15/2025	$ -	TBD	10-35-20	10-45-70	TBD	TBD	$ 1,884,901.00
HYDROGEOLOGICAL STUDY										
CFP - 2023-19 Paonia Hydrogeological Study	Col. River Water Conservation District	$ 25,000.00	5/30/2023	$ 12,500.00	6/1/2026	60-36-30	60-50-75	Wright Water Engineering		$ 12,500.00
(CWCB) WSRF Grant - POGG1 2024-2691 Hydrogeological Study of Paonia Spring Complexes	Col. Water Conservation Board	$ 147,973.00	11/27/2023	$ 97,362.80	11/27/2028	60-36-30	60-50-70	Wright Water Engineering		$ 50,610.20
	CWCB Task 1	Engineering & Data Review	$ 50,570.00	$ 36,916.93						
	CWCB Task 2	Subsurface Investigation	$ 97,403.00	$ 60,445.87						
	CWCB Task 3	Metering	$ -	$ -						
				$ 109,862.80		60-36-30	60-50-70	Wright Water Engineering	$ 240,774.00	$ 63,110.20
GRANT14002201 - Funding Opportunity No. R23AS00109 - Water SMART Planning & Project Design Grant - Paonia, "Watershed and Water System Strategy Plans for Resiliency in the Face of Change"	Bureau of Reclamation	$ 250,000.00	4/23/2024	$ -	TBD	60-36-30	60-50-70	Wright Water Engineering	TBD	$ 250,000.00
SS4A - Safe Streets for All - Supplemental Planning and Demonstration Grant	USDOT (FHWA)	$ 293,974.00	6/18/2024	$ -	TBD	10-35-20	10-45-20	Consor Engineering	TBD	$ 293,974.00
							Total Grant Funding	$ 6,503,947.00		
							Total Received	$ 819,368.22	**Remaining Grant Balance**	$ 5,684,578.78

ACCOUNT	DESCRIPTION	ADOPTED FY-2026 BUDGET	JANUARY 31st ACTUAL
	General Fund Revenues		
10-31-01	PROPERTY TAXES	$ 160,000.00	$ -
10-31-02	S.O. AUTO TAXES	$ 20,200.00	$ 1,527.57
10-31-03	SALES TAX - TOWN	$ 575,000.00	$ 44,560.39
10-31-04	SALES TAX - COUNTY	$ 150,000.00	$ 13,638.25
10-31-05	SALES TAX - STATE MARIJUANA	$ 5,000.00	$ 256.69
10-31-06	CIGARETTE TAX	$ 800.00	$ 76.56
10-31-07	FRANCHISE TAX	$ 55,000.00	$ 7,152.07
10-31-08	PENALTY & INTEREST	$ 500.00	$ -
10-31-09	DELINQUENT TAX	$ -	$ -
10-31-10	ABATEMENTS	$ -	$ -
10-31-11	MARIJUANA OCCUPATIONAL TAX (Transaction Fee)	$ 65,000.00	$ 5,450.00
	Subgroup : TAXES	**$ 1,031,500.00**	**$ 72,661.53**
	General Fund Revenues		
10-32-01	LIQUOR LICENSES	$ 5,500.00	$ 250.00
10-32-02	MISCELLANEOUS PERMITS	$ 5,500.00	$ 40.00
10-32-03	BUILDING PERMITS	$ 42,250.00	$ 1,938.00
10-32-04	SPECIAL REVIEWS	$ 1,000.00	$ -
10-32-05	ZONING VERIFICATION & ADMINISTRATIVE REVIEWS	$ 700.00	$ -
10-32-06	VIN INSPECTIONS	$ 1,300.00	$ 114.00
10-32-07	PRE-APPLICATION MEETINGS	$ 500.00	$ -
10-32-08	SHORT-TERM RENTAL LICENSES	$ -	$ -
10-32-09	SPECIAL EVENT PERMIT FEES	$ 2,200.00	$ -
10-32-10	MARIJUANA LICENSING FEE	$ 3,300.00	$ 2,375.00
	Subgroup : LICENSES, PERMITS & FEES	**$ 62,250.00**	**$ 4,717.00**
	General Fund Revenues		
10-33-01	HIGHWAY USER TAX	$ 52,000.00	$ 5,095.36
10-33-02	MOTOR VEHICLE - $1.50	$ 1,500.00	$ 94.87
10-33-03	MOTOR VEHICLE - $2.50	$ 3,500.00	$ 230.00
10-33-07	SEVERANCE TAX	$ 3,500.00	$ -
10-33-08	MINERAL LEASING	$ 8,500.00	$ -
10-33-10	ROAD & BRIDGE	$ 7,000.00	$ -
	Subgroup : INTERGOVERNMENTAL REVENUES	**$ 76,000.00**	**$ 5,420.23**
	General Fund Revenues		
10-34-01	COURT FINES	$ 1,000.00	$ 150.00
10-34-02	POLICE FINES	$ 8,500.00	$ 1,075.00
10-34-03	MISCELLANEOUS FINES - BONDS	$ 500.00	$ 1,417.41
10-34-04	BACK THE BADGE (0.8% SALES TAX)	$ 255,000.00	$ 19,363.86
10-34-05	DOG TAGS	$ 500.00	$ 90.00
10-34-06	CODE ENFORCEMENT VIOLATIONS	$ 1,500.00	$ -
10-34-10	LAW ENFORCEMENT COST ALLOCATION	$ -	$ -
10-34-50	PD GRANT	$ -	$ -
	Subgroup : FINES AND FORFEITURES	**$ 267,000.00**	**$ 22,096.27**

ACCOUNT	DESCRIPTION	ADOPTED FY-2026 BUDGET	JANUARY 31st ACTUAL
	General Fund Revenues		
10-35-01	RENTS & ROYALTIES	$ 30,000.00	$ 120.00
10-35-02	MOTOR FUEL TAX REFUNDS	$ -	$ -
10-35-04	INTEREST INCOME	$ 156,000.00	$ 16,672.34
10-35-05	LATE CHARGES	$ 4,750.00	$ 580.00
10-35-06	OTHER INCOME	$ 1,250.00	$ -
10-35-07	INSURANCE PROCEEDS	$ -	$ -
10-35-09	PARK DONATIONS	$ -	$ -
10-35-10	OTHER AGENCY CONTRIBUTIONS	$ 500.00	$ -
10-35-13	BRIDGE RESERVE	$ -	$ -
10-35-15	REFUND OF EXPENDITURES	$ 7,500.00	$ 10.80
10-35-16	RESTITUTION	$ 5,500.00	$ 86.50
10-35-18	SALES OF ASSETS	$ 20,500.00	$ -
	Subgroup : MISCELLANEOUS REVENUES	**$ 226,000.00**	**$ 17,469.64**
	General Fund Revenues		
10-39-99	TRANSFER REVENUE	$ -	$ -
	Subgroup : TRANSFERS	**$ -**	**$ -**
	General Fund Revenues		
	TOTAL GENERAL FUND REVENUES	**$ 1,662,750.00**	**$ 122,364.67**
	General Fund Revenues		
	TOTAL GENERAL FUND EXPENDITURES	$ (1,764,575.00)	$ -
	NET SURPLUS (LOSS) - General Fund	$ (101,825.00)	$ 122,364.67
	UNRESTRICTED FUND BALANCE BEGINNING	$ 813,338.00	$ 813,338.00
	UNRESTRICTED FUND BALANCE ENDING	**$ 711,513.00**	**$ 935,702.67**

ACCOUNT	DESCRIPTION	ADOPTED FY-2026 BUDGET	JANUARY 31st ACTUAL
	CIP REVENUE		
22-31-06	MARIJUANA OCCUPATIONAL TAX (Transaction Fee)	$ -	$ -
26-30-01	SIDEWALK FEE	$ 26,500.00	$ 2,528.47
40-38-01	CONSERVATION TRUST FUND	$ 5,500.00	$ -
50-31-03	SALES TAX - CIP	$ 260,000.00	$ 22,276.85
10-35-20	GRANT REVENUE	$ 311,474.00	$ 2,025.00
10-35-20	GRANT REVENUE - 5TH & GRAND	$ 3,156,804.00	$ -
10-35-13	BRIDGE RESERVE	$ 6,500.00	$ -
	Subgroup : General Fund CIP	$ 277,500.00	$ 24,301.85
	Subgroup : Street Fund CIP	$ 293,974.00	$ -
	Subgroup : Street Fund CIP - 5th & Grand	$ 3,156,804.00	$ -
	Subgroup : Sidewalk Fund CIP	$ 26,500.00	$ 2,528.47
	Subgroup : Conservation Trust Fund	$ 5,500.00	$ -
	Total All Funds	**$ 3,760,278.00**	**$ 26,830.32**
	CIP EXPENDITURES		
10-41-73 10-41-74 10-41-75 10-41-78	CAPITAL OUTLAY EXPENSES ADMINISTRATION	$ (93,000.00)	$ (6,818.02)
10-42-73 10-42-74	CAPITAL OUTLAY EXPENSES LAW ENFORCEMENT	$ (85,600.00)	$ -
10-43-73 10-43-74	CAPITAL OUTLAY EXPENSES BUILDING	$ -	$ -
10-45-70 10-45-71 10-45-73 10-45-74 10-45-75 10-45-90 10-45-99	CAPITAL OUTLAY EXPENSES PW-STREETS	$ (471,986.00)	$ (17,550.00)
10-45-72	CAPITAL OUTLAY EXPENSES PW -STREETS 5TH & GRAND	$ (3,200,000.00)	$ -
10-46-70 10-46-71 10-46-73 10-46-74 10-46-75 10-46-90 10-46-99	CAPITAL OUTLAY EXPENSES PW - PARKS	$ (85,500.00)	$ -
26-45-70	CAPITAL OUTLAY EXPENSES - SIDEWALKS	$ (85,000.00)	$ -
40-46-20	CAPITAL OUTLAY EXPENSES PW - CONSERVATION TRUST	$ -	$ -
24-45-70	CAPITAL OUTLAY EXPENSES - BRIDGE RESERVE	$ (500,000.00)	$ -
	Subgroup : CIP EXPENDITURES - GENERAL FUND CIP	$ (264,100.00)	$ (6,818.02)
	Subgroup : CIP EXPENDITURES - STREET FUND CIP	$ (471,986.00)	$ (17,550.00)
	Subgroup : CIP EXPENDITURES - STREET FUND CIP - 5TH & GRAND	$ (3,200,000.00)	$ -
	Subgroup : CIP EXPENDITURES - SIDEWALK FUND CIP	$ (85,000.00)	$ -
	Subgroup : CIP EXPENDITURES - CONSERVATION TRUST CIP	$ -	$ -
	Subgroup : CIP EXPENDITURES - BRIDGE RESERVE	$ (500,000.00)	$ -

ACCOUNT	DESCRIPTION	ADOPTED FY-2026 BUDGET	JANUARY 31st ACTUAL
CIP TOTALS			
	NET SURPLUS (LOSS) - GENERAL FUND CIP	$ 13,400.00	$ 17,483.83
	RESTRICTED FUND BALANCE BEGINNING - GENERAL FUND CIP	$ 513,186.00	$ 513,186.00
	RESTRICTED FUND BALANCE ENDING - GENERAL FUND CIP	**$ 526,586.00**	**$ 530,669.83**
	NET SURPLUS (LOSS) - STREET FUND CIP	$ (221,208.00)	$ (17,550.00)
	RESTRICTED FUND BALANCE BEGINNING - STREET FUND CIP	$ 913,032.00	$ 913,032.00
	RESTRICTED FUND BALANCE ENDING - STREET FUND CIP	**$ 691,824.00**	**$ 895,482.00**
	NET SURPLUS (LOSS) - SIDEWALK FUND CIP	$ (58,500.00)	$ 2,528.47
	RESTRICTED FUND BALANCE BEGINNING - SIDEWALK FUND CIP	$ 150,623.00	$ 150,623.00
	RESTRICTED FUND BALANCE ENDING - SIDEWALK FUND CIP	**$ 92,123.00**	**$ 153,151.47**
	NET SURPLUS (LOSS) - CONSERVATION TRUST CIP	$ 5,500.00	$ -
	RESTRICTED FUND BALANCE BEGINNING - CONSERVATION TRUST CIP	$ 8,797.00	$ 8,797.00
	RESTRICTED FUND BALANCE ENDING - CONSERVATION TRUST CIP	**$ 14,297.00**	**$ 8,797.00**
	NET SURPLUS (LOSS) - BRIDGE RESERVE	$ (493,500.00)	$ -
	RESTRICTED FUND BALANCE BEGINNING - BRIDGE RESERVE	$ 671,000.00	$ 671,000.00
	RESTRICTED FUND BALANCE ENDING - BRIDGE RESERVE	**$ 177,500.00**	**$ 671,000.00**

ACCOUNT	DESCRIPTION	ADOPTED FY-2026 BUDGET	JANURY 31st ACTUAL
ADMINISTRATION	**PERSONNEL SERVICES**		
10-41-01	MAYOR & TRUSTEES	$ 2,400.00	$ 1,400.00
10-41-02	TOWN ADMINISTRATOR/CONTRACT LABOR	$ 33,000.00	$ 3,683.82
10-41-03	SALARIES & WAGES	$ 93,500.00	$ 8,420.71
10-41-04	EMPLOYER FICA	$ 8,300.00	$ 835.21
10-41-05	EMPLOYER MEDICARE	$ 2,050.00	$ 195.33
10-41-06	UNEMPLOYMENT TAX	$ 300.00	$ 26.95
10-41-07	INSURANCE BENEFITS	$ 32,000.00	$ 2,950.22
10-41-08	RETIREMENT BENEFITS	$ 6,250.00	$ 441.89
10-41-09	LIFE/DISABILITY INSURANCE	$ 325.00	$ -
10-41-10	WORKMEN'S COMPENSATION	$ 1,575.00	$ -
10-41-13	OVERTIME	$ 3,800.00	$ 323.09
	Subgroup : Personnel Services	**$ 183,500.00**	**$ 18,277.22**
ADMINISTRATION	**OPERATING**		
10-41-15	OFFICE SUPPLIES	$ 2,000.00	$ 14.40
10-41-16	OPERATING SUPPLIES	$ 2,900.00	$ -
10-41-17	POSTAGE	$ 1,100.00	$ -
10-41-20	LEGAL, ENGINEERING & PROFESSIONAL SERVICES	$ 50,000.00	$ 703.39
10-41-21	AUDIT & BUDGET EXPENSE	$ 7,000.00	$ -
10-41-22	REPAIRS & MAINTENANCE	$ 1,000.00	$ -
10-41-23	VEHICLE EXPENSE	$ 750.00	$ -
10-41-25	TOWN HALL EXPENSE	$ 3,600.00	$ -
10-41-26	TRAVEL, MEETINGS, & TRAININGS	$ 7,500.00	$ -
10-41-27	INSURANCE & BONDS	$ 10,000.00	$ 2,676.63
10-41-28	UTILITIES	$ 5,000.00	$ -
10-41-29	TELEPHONE & INTERNET	$ 2,800.00	$ -
10-41-30	PUBLISHING ADS	$ 2,400.00	$ -
10-41-31	DUES & SUBSCRIPTIONS	$ 37,700.00	$ 45.38
10-41-33	DATA PROCESSING	$ 8,500.00	$ 278.25
10-41-40	MISCELLANEOUS	$ 1,000.00	$ -
10-41-43	CULTURAL EVENTS	$ 500.00	$ -
10-41-44	HUMAN SERVICES	$ 7,500.00	$ -
10-41-45	BUILDING INSPECTOR	$ -	$ -
10-41-90	TREASURER'S FEE	$ 14,300.00	$ 652.96
	Subgroup : Operating Expenditures	**$ 165,550.00**	**$ 4,371.01**
	GENERAL FUND TOTAL	**$ 349,050.00**	**$ 22,648.23**
ADMINISTRATION	**CAPITAL OUTLAY & TRANSFERS**		
10-41-73	BUILDING IMPROVEMENTS	$ 50,000.00	$ 489.72
10-41-74	MACHINERY & EQUIPMENT	$ 14,500.00	$ 6,328.30
10-41-75	GRANT PROJECTS	$ 8,500.00	$ -
10-41-78	GRANT PROJECT - CODE REVISION	$ 20,000.00	$ -
10-41-99	TRANSFERS	$ -	$ -
	SUBGROUP : SALES TAX CIP TOTAL	**$ 93,000.00**	**$ 6,818.02**

ACCOUNT	DESCRIPTION	ADOPTED FY-2026 BUDGET	JANUARY 31st ACTUAL
LAW ENFORCEMENT	**PERSONNEL SERVICES**		
10-42-02	CONTRACT LABOR (JUDGE)	$ 7,500.00	$ 1,100.00
10-42-03	SALARIES & WAGES	$ 520,000.00	$ 50,281.58
10-42-04	EMPLOYER FICA	$ 35,750.00	$ 439.48
10-42-05	EMPLOYER MEDICARE	$ 8,400.00	$ 726.74
10-42-06	UNEMPLOYMENT TAX	$ 1,150.00	$ 100.24
10-42-07	INSURANCE BENEFITS	$ 107,000.00	$ 14,581.84
10-42-08	RETIREMENT BENEFITS	$ 12,500.00	$ 1,189.38
10-42-09	LIFE/DISABILITY INSURANCE	$ 1,300.00	$ -
10-42-10	WORKMEN'S COMPENSATION	$ 16,050.00	$ -
10-42-11	FPPA PENSION	$ 49,000.00	$ 4,757.85
10-42-12	FPPA D&D	$ 17,500.00	$ 1,727.19
10-42-13	OVERTIME & ON-CALL	$ 20,150.00	$ 1,000.47
	Subgroup : Personnel Services	**$ 796,300.00**	**$ 75,904.77**
LAW ENFORCEMENT	**OPERATING**		
10-42-15	OFFICE SUPPLIES	$ 1,250.00	$ 14.40
10-42-16	OPERATING SUPPLIES	$ 3,750.00	$ -
10-42-17	POSTAGE	$ 500.00	$ -
10-42-19	UNIFORMS	$ 10,000.00	$ -
10-42-20	LEGAL, ENGINEERING & PROFESSIONAL SERVICES	$ 15,000.00	$ 58.33
10-42-22	REPAIRS & MAINTENANCE	$ 1,500.00	$ -
10-42-23	VEHICLE EXPENSE	$ 18,000.00	$ 267.04
10-42-26	TRAVEL, MEETINGS, & TRAININGS	$ 3,500.00	$ -
10-42-27	INSURANCE & BONDS	$ 60,500.00	$ 13,823.74
10-42-28	UTILITIES	$ 2,800.00	$ -
10-42-29	TELEPHONE & INTERNET	$ 6,000.00	$ -
10-42-30	PUBLISHING ADS	$ -	$ -
10-42-31	DUES & SUBSCRIPTIONS	$ 7,500.00	$ 20.39
10-42-33	DATA PROCESSING	$ 3,500.00	$ 278.25
10-42-42	CONTRACT SERVICES	$ 22,000.00	$ -
10-42-44	HUMAN SERVICES	$ 2,000.00	$ -
	Subgroup : Operating Expenditures	**$ 157,800.00**	**$ 14,462.15**
	GENERAL FUND TOTAL	**$ 954,100.00**	**$ 90,366.92**
LAW ENFORCEMENT	**CAPITAL OUTLAY & TRANSFERS**		
10-42-73	BUILDING IMPROVEMENTS	$ 15,000.00	$ -
10-42-74	MACHINERY & EQUIPMENT	$ 70,600.00	$ -
	SUBGROUP : SALES TAX CIP TOTAL	**$ 85,600.00**	**$ -**

ACCOUNT	DESCRIPTION	ADOPTED BUDGET FY-2026	JANUARY 31st ACTUAL
BUILDING	**PERSONNEL SERVICES**		
10-43-01	MAYOR & TRUSTEES	$ -	$ -
10-43-02	CONTRACT LABOR	$ -	$ -
10-43-03	SALARIES & WAGES	$ -	$ -
10-43-04	EMPLOYER FICA	$ -	$ -
10-43-05	EMPLOYER MEDICARE	$ -	$ -
10-43-06	UNEMPLOYMENT TAX	$ -	$ -
10-43-07	INSURANCE BENEFITS	$ -	$ -
10-43-08	RETIREMENT BENEFITS	$ -	$ -
10-43-09	LIFE/DISABILITY INSURANCE	$ -	$ -
10-43-10	WORKMEN'S COMPENSATION	$ -	$ -
10-43-13	OVERTIME	$ -	$ -
	Subgroup : Personnel Services	**$ -**	**$ -**
BUILDING	**OPERATING**		
10-43-15	OFFICE SUPPLIES	$ -	$ -
10-43-16	OPERATING SUPPLIES	$ -	$ -
10-43-17	POSTAGE	$ -	$ -
10-43-20	LEGAL, ENGINEERING & PROFESSIONAL SERVICES	$ 42,250.00	$ -
10-43-22	REPAIRS & MAINTENANCE	$ -	$ -
10-43-23	VEHICLE EXPENSE	$ -	$ -
10-43-26	TRAVEL & MEETINGS	$ -	$ -
10-43-27	INSURANCE & BONDS	$ -	$ -
10-43-28	UTILITIES	$ -	$ -
10-43-29	TELEPHONE & INTERNET	$ -	$ -
10-43-30	PUBLISHING ADS	$ -	$ -
10-43-31	DUES & SUBSCRIPTIONS	$ -	$ -
10-43-33	DATA PROCESSING	$ -	$ -
10-43-40	MISCELLANEOUS	$ -	$ -
10-43-43	CULTURAL EVENTS	$ -	$ -
10-43-44	HUMAN SERVICES	$ -	$ -
	Subgroup : Operating Expenditures	**$ 42,250.00**	**$ -**
	GENERAL FUND TOTAL	**$ 42,250.00**	**$ -**
BUILDING	**CAPITAL OUTLAY & TRANSFERS**		
10-43-73	BUILDING IMPROVEMENTS	$ -	$ -
10-43-74	MACHINERY & EQUIPMENT	$ -	$ -
	SUBGROUP : SALES TAX CIP TOTAL	**$ -**	**$ -**

ACCOUNT	DESCRIPTION	ADOPTED FY-2026 BUDGET	JANUARY 31st ACTUAL
STREETS	**PERSONNEL SERVICES**		
10-45-02	CONTRACT LABOR	$ -	$ -
10-45-03	SALARIES & WAGES	$ 100,000.00	$ 9,474.24
10-45-04	EMPLOYER FICA	$ 6,600.00	$ 584.31
10-45-05	EMPLOYER MEDICARE	$ 1,550.00	$ 136.65
10-45-06	UNEMPLOYMENT TAX	$ 225.00	$ 18.85
10-45-07	INSURANCE BENEFITS	$ 19,000.00	$ 2,096.76
10-45-08	RETIREMENT BENEFITS	$ 4,975.00	$ 439.54
10-45-09	LIFE/DISABILITY INSURANCE	$ 325.00	$ -
10-45-10	WORKMEN'S COMPENSATION	$ 5,100.00	$ -
10-45-13	OVERTIME	$ 3,400.00	$ 142.33
	Subgroup : Personnel Services	**$ 141,175.00**	**$ 12,892.68**
STREETS	**OPERATING**		
10-45-15	OFFICE SUPPLIES	$ 500.00	$ -
10-45-16	OPERATING SUPPLIES	$ 7,000.00	$ -
10-45-17	POSTAGE	$ -	$ -
10-45-19	UNIFORMS	$ 2,000.00	$ -
10-45-20	LEGAL, ENGINEERING & PROFESSIONAL SERVICES	$ 20,000.00	$ -
10-45-21	AUDIT & BUDGET EXPENSE	$ 3,500.00	$ -
10-45-22	REPAIRS & MAINTENANCE	$ 11,000.00	$ -
10-45-23	VEHICLE EXPENSE	$ 8,000.00	$ 303.12
10-45-24	RENTALS	$ -	$ -
10-45-25	SHOP EXPENSE	$ 9,000.00	$ -
10-45-26	TRAVEL, MEETINGS & TRAININGS	$ 1,500.00	$ -
10-45-27	INSURANCE & BONDS	$ 4,500.00	$ 1,589.12
10-45-28	UTILITIES	$ 12,250.00	$ -
10-45-29	TELEPHONE & INTERNET	$ 1,550.00	$ -
10-45-30	PUBLISHING ADS	$ 100.00	$ -
10-45-31	DUES & SUBSCRIPTIONS	$ 1,100.00	$ -
10-45-32	FEES & PERMITS	$ 2,500.00	$ -
10-45-33	DATA PROCESSING	$ -	$ -
10-45-40	MISCELLANEOUS	$ 500.00	$ -
10-45-42	SNOW REMOVAL	$ 18,000.00	$ -
10-45-43	CULTURAL EVENTS	$ -	$ -
10-45-44	HUMAN SERVICES	$ -	$ -
10-45-45	BUILDING INSPECTOR	$ -	$ -
	Subgroup : Operating Expenditures	**$ 103,000.00**	**$ 1,892.24**
	GENERAL FUND TOTAL	**$ 244,175.00**	**$ 14,784.92**
STREETS	**CAPITAL OUTLAY & TRANSFERS**		
10-45-70	CAPITAL OUTLAY	$ 29,000.00	$ 17,550.00
10-45-71	RIGHT OF WAY MAINTENANCE	$ 25,000.00	$ -
10-45-72	5TH STREET REALIGNMENT	$ 3,200,000.00	$ -
10-45-73	BUILDING IMPROVEMENTS	$ 5,500.00	$ -
10-45-74	MACHINERY & EQUIPMENT	$ 45,000.00	$ -
10-45-75	GRANT PROJECTS	$ 367,486.00	$ -
10-45-90	TREASURER'S FEE	$ -	$ -
10-45-99	TRANSFERS	$ -	$ -
24-45-70	CAPITAL OUTLAY - BRIDGE RESERVE	$ 500,000.00	$ -
26-45-70	CAPITAL OUTLAY - SIDEWALKS	$ 85,000.00	$ -
	SUBGROUP : SALES TAX CIP TOTAL	**$ 4,256,986.00**	**$ 17,550.00**

ACCOUNT	DESCRIPTION	ADOPTED FY-2026 BUDGET	JANUARY 31st ACTUAL
PARKS	**PERSONNEL SERVICES**		
10-46-02	CONTRACT LABOR (SEASONAL EMPLOYEES)	$ 26,000.00	$ -
10-46-03	SALARIES & WAGES	$ 60,000.00	$ 5,334.55
10-46-04	EMPLOYER FICA	$ 5,500.00	$ 327.24
10-46-05	EMPLOYER MEDICARE	$ 1,300.00	$ 76.53
10-46-06	UNEMPLOYMENT TAX	$ 200.00	$ 10.55
10-46-07	INSURANCE BENEFITS	$ 12,000.00	$ 1,015.94
10-46-08	RETIREMENT BENEFITS	$ 3,200.00	$ 229.69
10-46-09	LIFE/DISABILITY INSURANCE	$ 200.00	$ -
10-46-10	WORKMEN'S COMPENSATION	$ 2,900.00	$ -
10-46-13	OVERTIME	$ 2,200.00	$ 52.11
	Subgroup : Personnel Services	**$ 113,500.00**	**$ 7,046.61**
PARKS	**OPERATING**		
10-46-15	OFFICE SUPPLIES	$ 200.00	$ -
10-46-16	OPERATING SUPPLIES	$ 5,900.00	$ -
10-46-17	POSTAGE	$ -	$ -
10-46-19	UNIFORMS	$ 2,000.00	$ -
10-46-20	LEGAL, ENGINEERING & PROFESSIONAL SERVICES	$ 2,000.00	$ -
10-46-21	AUDIT & BUDGET EXPENSE	$ 4,800.00	$ -
10-46-22	REPAIRS & MAINTENANCE	$ 18,000.00	$ -
10-46-23	VEHICLE EXPENSE	$ 5,250.00	$ 303.12
10-46-24	RENTALS	$ 500.00	$ -
10-46-25	SHOP EXPENSE	$ 100.00	$ -
10-46-26	TRAVEL, MEETINGS & TRAININGS	$ 500.00	$ -
10-46-27	INSURANCE & BONDS	$ 6,500.00	$ 1,250.05
10-46-28	UTILITIES	$ 7,750.00	$ -
10-46-29	TELEPHONE & INTERNET	$ 2,000.00	$ -
10-46-30	PUBLISHING ADS	$ -	$ -
10-46-31	DUES & SUBSCRIPTIONS	$ 3,000.00	$ -
10-46-32	FEES & PERMITS	$ -	$ -
10-46-33	DATA PROCESSING	$ -	$ -
10-46-40	MISCELLANEOUS	$ 500.00	$ -
10-46-42	CONTRACT SERVICES	$ 2,500.00	$ -
10-46-43	CULTURAL EVENTS	$ -	$ -
10-46-44	HUMAN SERVICES	$ -	$ -
10-46-45	BUILDING INSPECTOR	$ -	$ -
	Subgroup : Operating Expenditures	**$ 61,500.00**	**$ 1,553.17**
	GENERAL FUND TOTAL	**$ 175,000.00**	**$ 8,599.78**
PARKS	**CAPITAL OUTLAY & TRANSFERS**		
10-46-70	CAPITAL OUTLAY	$ 20,000.00	$ -
10-46-71	RIGHT OF WAY MAINTENANCE	$ 15,000.00	$ -
10-46-73	BUILDING IMPROVEMENTS	$ 7,500.00	$ -
10-46-74	MACHINERY & EQUIPMENT	$ 43,000.00	$ -
10-46-75	GRANT PROJECTS	$ -	$ -
10-46-90	TREASURER'S FEE	$ -	$ -
10-46-99	TRANSFERS	$ -	$ -
40-46-20	CONSERVATION TRUST FUND EXPENDITURES	$ -	$ -
	SUBGROUP : SALES TAX CIP TOTAL	**$ 85,500.00**	**$ -**

ACCOUNT	DESCRIPTION		ADOPTED FY-2026 BUDGET
WATER			
	** Revenue is dependent upon utility rate increases*		
	WATER UTILITY REVENUE		
60-36-01*	WATER CHARGES	$	962,000.00
60-36-02*	WATER CHARGES - USAGE	$	380,000.00
60-36-03	SALES & SERVICES	$	1,000.00
60-36-04	STANDBY TAP FEES	$	49,000.00
60-36-05	BULK WATER	$	12,000.00
60-36-06	RECONNECT FEES & PENALTIES	$	-
60-36-07	WATER TAPS	$	-
60-36-08	TAPS FEES ASSIGNED FOR STORAGE	$	-
60-36-09	PENALTIES	$	6,000.00
60-36-10	INTEREST	$	-
60-36-12	RENTS	$	1,000.00
60-36-13	MISCELLANEOUS REVENUE	$	1,000.00
60-36-15	SALE/DISPOSAL OF ASSETS	$	-
60-36-20	PASS THROUGH FUNDS	$	-
60-36-21	DOLA PASS THROUGH REVENUE	$	-
60-36-22	WPA PASS THROUGH REVENUE	$	-
60-36-23	DWRF GRANT (PRINCIPAL LOAN FORGIVENESS)	$	-
60-36-24	DOLA URS PASS THROUGH REVENUE	$	-
60-36-25	LOAN FUNDS	$	5,257,000.00
60-36-28	WATERSMART GRANT REVENUE	$	250,000.00
60-36-30	GRANT FUNDS	$	1,352,000.00
60-36-31	CAPITAL CONTRIBUTIONS	$	-
	Subgroup : Total Revenue[1]	**$**	**8,271,000.00**

WATER			
	WATER UTILITY PERSONNEL SERVICES		
60-50-02	TRUSTEE/ADMIN SALARIES	$	48,600.00
60-50-03	SALARIES & WAGES	$	289,000.00
60-50-04	EMPLOYER FICA	$	22,000.00
60-50-05	EMPLOYER MEDICARE	$	5,200.00
60-50-06	UNEMPLOYMENT TAX	$	750.00
60-50-07	INSURANCE BENEFITS	$	70,500.00
60-50-08	RETIREMENT BENEFITS	$	18,000.00
60-50-09	LIFE/DISABILITY INSURANCE	$	900.00
60-50-10	WORKMEN'S COMPENSATION	$	6,500.00
60-50-13	OVERTIME & ON-CALL	$	31,000.00
	Subgroup : Personnel Services	**$**	**492,450.00**
WATER			
	WATER UTILITY OPERATING EXPENSES		
60-50-14	CHEMICALS	$	15,000.00
60-50-15	OFFICE SUPPLIES	$	4,500.00
60-50-16	OPERATING SUPPLIES	$	15,000.00
60-50-17	POSTAGE	$	4,500.00
60-50-19	UNIFORMS	$	2,000.00
60-50-20	LEGAL, ENGINEERING & PROFESSIONAL SERVICES	$	175,000.00
60-50-21	AUDIT & BUDGET EXPENSE	$	25,000.00
60-50-22	REPAIRS & MAINTENANCE	$	25,000.00
60-50-23	VEHICLE EXPENSE	$	12,000.00
60-50-24	RENTALS	$	2,000.00

ACCOUNT	DESCRIPTION		ADOPTED FY-2026 BUDGET
WATER			
	WATER UTILITY OPERATING EXPENSES		
60-50-25	SHOP EXPENSE	$	8,000.00
60-50-26	TRAVEL, MEETINGS & TRAININGS	$	4,500.00
60-50-27	INSURANCE & BONDS	$	21,500.00
60-50-28	UTILITIES	$	28,000.00
60-50-29	TELEPHONE & INTERNET	$	8,000.00
60-50-30	PUBLISHING ADS	$	500.00
60-50-31	DUES & SUBSCRIPTIONS	$	20,500.00
60-50-32	FEES & PERMITS	$	4,000.00
60-50-33	DATA PROCESSING	$	7,500.00
60-50-40	MISCELLANEOUS	$	1,000.00
60-50-41	WRITEOFF - UNCOLLECTABLE	$	1,500.00
60-50-42	CONTRACT SERVICES	$	7,000.00
60-50-44	NORRIS RETIREMENT	$	7,500.00
60-50-50	CWRPDA PRINCIPAL	$	615,000.00
60-50-51	CWRPDA INTEREST	$	-
60-50-52	WPA LOAN PRINCIPAL	$	-
60-50-53	WPA LOAN INTEREST	$	-
60-50-54	DEBT SERVICE	$	-
60-50-55	LOAN PRINCIPAL	$	72,500.00
60-50-56	LOAN INTEREST	$	42,000.00
60-50-57	INTEREST ON LEASE	$	-
60-50-60	WATER STORAGE EXPENDITURE	$	-
	Subgroup : Water Operating Expenditures		**1,129,000.00**

WATER			
	WATER UTILITY CAPITAL OUTLAY & TRANSFERS		
60-50-69	RAW WATER METERING	$	250,000.00
60-50-70	CAPITAL OUTLAY	$	300,000.00
60-50-71	PASS THROUGH ACCOUNT	$	-
60-50-72	WATER TANK RELINING	$	1,200,000.00
60-50-73	WEST LOOP IMPROVEMENT PROJECT	$	4,320,000.00
60-50-74	WATERSMART GRANT	$	425,000.00
60-50-75	GRANT PROJECTS	$	50,000.00
60-50-76	BUILDING IMPROVEMENTS	$	164,000.00
60-50-77	MACHINERY & EQUIPMENT	$	150,000.00
60-50-99	TRANSFERS	$	-
	Subgroup : Water Capital Outlay & Transfers	**$**	**6,859,000.00**
WATER			
	WATER UTILITY DEPRECIATION		
60-59-99	DEPRECIATION	$	-
	Subgroup : Water Depreciation	**$**	**-**
	WATER FUND		
TOTAL REVENUES		**$**	**8,271,000.00**
TOTAL EXPENDITURES		**$**	**(8,480,450.00)**
	NET INCOME (LOSS) - Water Utility	**$**	**(209,450.00)**
	UNRESTRICTED FUND BALANCE STARTING	**$**	**1,594,094.00**
	UNRESTRICTED FUND BALANCE ENDING	**$**	**1,384,644.00**

ACCOUNT	DESCRIPTION	ADOPTED FY-26 BUDGET	JANUARY 31st ACTUAL
WASTEWATER			
	WASTEWATER UTILITY REVENUE		
70-37-01	SEWER BASE CHARGE	$ 782,000.00	$ 65,243.07
70-37-04	SEWER TAPS	$ -	$ -
70-37-05	SEWER RENTAL PROPERTY	$ -	$ -
70-37-07	SALES & SERVICE	$ -	$ -
70-37-08	PASS THROUGH FUNDS	$ -	$ -
70-37-09	INTEREST INCOME	$ 30,000.00	$ 2,451.25
70-37-10	WWTP PAYBACK FUND	$ -	$ -
70-37-11	WWTP PAYBACK INTEREST	$ -	$ -
70-37-12	RENTS	$ -	$ -
70-37-13	GRANT REVENUE	$ 5,000.00	$ -
70-37-14	MISCELLANEOUS REVENUE	$ -	$ -
	Subgroup : Total Revenue	**$ 817,000.00**	**$ 67,694.32**
WASTEWATER			
	WASTEWATER UTILITY PERSONNEL SERVICES		
70-51-02	TRUSTEE/ADMIN SALARIES	$ 48,600.00	$ 5,157.36
70-51-03	SALARIES & WAGES	$ 287,000.00	$ 29,588.83
70-51-04	EMPLOYER FICA	$ 22,000.00	$ 2,153.16
70-51-05	EMPLOYER MEDICARE	$ 5,100.00	$ 503.57
70-51-06	UNEMPLOYMENT TAX	$ 700.00	$ 69.46
70-51-07	INSURANCE BENEFITS	$ 70,000.00	$ 8,410.42
70-51-08	RETIREMENT BENEFITS	$ 17,700.00	$ 1,363.45
70-51-09	LIFE/DISABILITY INSURANCE	$ 850.00	$ -
70-51-10	WORKMEN'S COMPENSATION	$ 5,900.00	$ -
70-51-11	OVERTIME & ON-CALL	$ 17,300.00	$ 826.86
	Subgroup : Personnel Services	**$ 475,150.00**	**$ 48,073.11**
WASTEWATER			
	WASTEWATER UTILITY OPERATING EXPENSES		
70-51-14	CHEMICALS	$ 15,500.00	$ -
70-51-15	OFFICE SUPPLIES	$ 1,000.00	$ 14.40
70-51-16	OPERATING SUPPLIES	$ 5,000.00	$ -
70-51-17	POSTAGE	$ 3,500.00	$ 189.30
70-51-19	UNIFORMS	$ 2,000.00	$ -
70-51-20	LEGAL, ENGINEERING & PROFESSIONAL SERVICES	$ 65,000.00	$ 135.48
70-51-21	AUDIT & BUDGET EXPENSE	$ 11,000.00	$ -
70-51-22	REPAIRS & MAINTENANCE	$ 25,000.00	$ -
70-51-23	VEHICLE EXPENSE	$ 11,000.00	$ 303.10
70-51-24	RENTALS	$ 2,500.00	$ -
70-51-25	SHOP EXPENSE	$ 2,500.00	$ -
70-51-26	TRAVEL, MEETINGS & TRAININGS	$ 3,000.00	$ -
70-51-27	INSURANCE & BONDS	$ 15,500.00	$ 4,491.81
70-51-28	UTILITIES	$ 45,000.00	$ -
70-51-29	TELEPHONE & INTERNET	$ 3,750.00	$ -
70-51-30	PUBLISHING ADS	$ 150.00	$ -
70-51-31	DUES & SUBSCRIPTIONS	$ 18,000.00	$ 40.77

ACCOUNT	DESCRIPTION	ADOPTED FY-26 BUDGET	JANUARY 31st ACTUAL
WASTEWATER			
	WASTEWATER UTILITY OPERATING EXPENSES		
70-51-32	FEES & PERMITS	$ 3,600.00	$ -
70-51-33	DATA PROCESSING	$ 7,500.00	$ 556.50
70-51-40	MISCELLANEOUS	$ 5,000.00	$ -
70-51-41	WRITEOFF - UNCOLLECTABLE	$ 500.00	$ -
70-51-42	CONTRACT SERVICES	$ 5,000.00	$ -
70-51-43	GAUGING STATION	$ 5,000.00	$ -
70-51-44	NORRIS RETIREMENT	$ 7,500.00	$ 560.00
70-51-50	DOLA PRINCIPAL & INTEREST	$ -	$ -
70-51-51	RURAL DEVELOPMENT PRINCIPAL & INTEREST	$ 78,000.00	$ -
70-51-52	WWTP PAYBACK FUND EXPENDITURES	$ -	$ -
70-51-53	ISSUANCE COSTS	$ -	$ -
70-51-54	DEBT RESERVE	$ -	$ -
	Subgroup : Operating Expenses	**$ 341,500.00**	**$ 6,291.36**
WASTEWATER			
	WASTEWATER UTILITY CAPITAL OUTLAY & TRANSFERS		
70-51-70	CAPITAL OUTLAY	$ 15,000.00	$ (7,175.19)
70-51-71	PASS THROUGH FUNDS	$ -	$ -
70-51-72	ASSET REPLACEMENT RESERVE	$ -	$ -
70-51-73	PASS THROUGH OPERATING	$ -	$ -
70-51-74	SEWER LINE IMPROVEMENTS	$ 12,000.00	$ -
70-51-75	GRANT PROJECTS	$ 5,000.00	$ -
70-51-76	BUILDING IMPROVEMENTS	$ 7,500.00	$ 504.56
70-51-77	MACHINERY & EQUIPMENT	$ 22,350.00	$ 846.89
70-51-99	TRANSFERS	$ -	$ -
	Subgroup : Wastewater Capital Outlay & Transfers	**$ 61,850.00**	**$ (5,823.74)**
WASTEWATER			
	WASTEWATER UTILITY DEPRECIATION		
70-59-99	DEPRECIATION	$ -	$ -
	Subgroup : Wastewater Depreciation	**$ -**	**$ -**
	WASTEWATER FUND		
TOTAL REVENUES		**$ 817,000.00**	**$ 67,694.32**
TOTAL EXPENDITURES		**$ (878,500.00)**	**$ (48,540.73)**
	NET INCOME (LOSS) - Wastewater Utility	**$ (61,500.00)**	**$ 19,153.59**
	UNRESTRICTED FUND BALANCE STARTING	**$ 437,370.00**	**$ 437,370.00**
	UNRESTRICTED FUND BALANCE ENDING	**$ 375,870.00**	**$ 456,523.59**

ACCOUNT	DESCRIPTION	ADOPTED FY-26 BUDGET	JANUARY 31st ACTUAL
SANITATION			
	SANITATION REVENUE		
80-30-02	TRASH CHARGES	$ 375,000.00	$ 30,561.63
80-30-03	BULK TRASH CHARGE	$ 3,500.00	$ -
80-30-04	TIRE PICK UP	$ -	$ -
80-30-05	TRANSFER REVENUE	$ -	$ -
	Subgroup : Total Revenue	**$ 378,500.00**	**$ 30,561.63**
SANITATION			
	SANITATION PERSONNEL SERVICES		
80-52-02	CONTRACT/ADMIN SALARIES	$ 9,400.00	$ 862.77
80-52-03	SALARIES & WAGES	$ 143,000.00	$ 13,282.86
80-52-04	EMPLOYER FICA	$ 9,500.00	$ 867.76
80-52-05	EMPLOYER MEDICARE	$ 2,250.00	$ 202.95
80-52-06	UNEMPLOYMENT TAX	$ 350.00	$ 27.98
80-52-07	INSURANCE BENEFITS	$ 32,500.00	$ 2,447.48
80-52-08	RETIREMENT BENEFITS	$ 7,750.00	$ 450.97
80-52-09	LIFE/DISABILITY INSURANCE	$ 450.00	$ -
80-52-10	WORKMEN'S COMPENSATION	$ 4,800.00	$ -
80-52-11	OVERTIME & ON-CALL	$ 6,500.00	$ 224.94
	Subgroup : Personnel Services	**$ 216,500.00**	**$ 18,367.71**
SANITATION			
	SANITATION OPERATING EXPENSES		
80-52-15	OFFICE SUPPLIES	$ 1,000.00	$ 14.40
80-52-16	OPERATING SUPPLIES	$ 1,500.00	$ -
80-52-17	POSTAGE	$ 2,600.00	$ 189.31
80-52-19	UNIFORMS	$ 2,000.00	$ -
80-52-20	LEGAL, ENGINEERING & PROFESSIONAL SERVICES	$ 20,000.00	$ 135.47
80-52-21	AUDIT & BUDGET EXPENSE	$ 4,800.00	$ -
80-52-22	REPAIRS & MAINTENANCE	$ 7,500.00	$ -
80-52-23	VEHICLE EXPENSE	$ 20,000.00	$ 843.40
80-52-24	RENTALS	$ -	$ -
80-52-25	SHOP EXPENSE	$ 3,000.00	$ -
80-52-26	TRAVEL, MEETINGS & TRAININGS	$ 3,000.00	$ -
80-52-27	INSURANCE & BONDS	$ 11,000.00	$ 3,862.79
80-52-28	UTILITIES	$ 2,500.00	$ -
80-52-29	TELEPHONE & INTERNET	$ 3,500.00	$ -
80-52-30	PUBLISHING ADS	$ 200.00	$ -
80-52-31	DUES & SUBSCRIPTIONS	$ 11,500.00	$ 40.77
80-52-32	FEES & PERMITS	$ -	$ -
80-52-33	DATA PROCESSING	$ 7,500.00	$ 556.50
80-52-40	MISCELLANEOUS	$ -	$ -
80-52-41	WRITEOFF - UNCOLLECTABLE	$ -	$ -
80-52-42	LANDFILL FEES	$ 51,400.00	$ -
80-52-43	CLEAN UP DAYS	$ -	$ -
	Subgroup : Operating Expenses	**$ 153,000.00**	**$ 5,642.64**

ACCOUNT	DESCRIPTION	ADOPTED FY-26 BUDGET	JANUARY 31st ACTUAL
SANITATION			
	SANITATION CAPITAL OUTLAY & TRANSFERS		
80-52-70	CAPITAL OUTLAY	$ 50,000.00	$ 1,071.00
80-52-71	PASS THROUGH FUNDS	$ -	$ -
80-52-75	GRANT PROJECTS	$ -	$ -
80-52-76	BUILDING IMPROVEMENTS	$ 2,500.00	$ -
80-52-77	MACHINERY & EQUIPMENT	$ 20,500.00	$ 846.89
80-52-99	TRANSFERS	$ -	$ -
	Subgroup : Sanitation Capital Outlay & Transfers	**$ 73,000.00**	**$ 1,917.89**
SANITATION			
	SANITATION DEPRECIATION		
80-59-99	DEPRECIATION		
	Subgroup : Sanitation Depreciation	**$ -**	**$ -**
	SANITATION FUND		
TOTAL REVENUES		$ 378,500.00	$ 30,561.63
TOTAL EXPENDITURES		$ 442,500.00	$ 25,928.24
	NET INCOME (LOSS) - Sanitation Utility	**$ (64,000.00)**	**$ 4,633.39**
	UNRESTRICTED FUND BALANCE STARTING	**$ 234,560.00**	**$ 234,560.00**
	UNRESTRICTED FUND BALANCE ENDING	**$ 170,560.00**	**$ 239,193.39**

ACCOUNT	DESCRIPTION		ADOPTED FY-26 BUDGET
NFV AIRPORT			
	NVF AIRPORT REVENUE		
50-31-06	AIRPORT REVENUE	$	7,650.00
50-31-15	TRANSFER FROM GENERAL FUND	$	-
50-31-16	CAPITAL IMPROVEMENT FUND - AIRPORT GRANTS	$	-
	Subgroup : Total Revenue	**$**	**7,650.00**
NFV AIRPORT			
	NFV AIRPORT CAPITAL OUTLAY & TRANSFERS		
50-32-70	CAPITAL OUTLAY	$	75,000.00
80-52-71	PASS THROUGH FUNDS	$	-
80-52-75	GRANT PROJECTS	$	-
80-52-76	BUILDING IMPROVEMENTS	$	-
80-52-77	MACHINERY & EQUIPMENT	$	-
80-52-99	TRANSFERS	$	-
	Subgroup : NFV Capital Outlay & Transfers	**$**	**75,000.00**
NFV AIRPORT			
	NFV AIRPORT DEPRECIATION		
80-59-99	DEPRECIATION	$	-
	Subgroup : NFV Depreciation	**$**	**-**
	NFV AIRPORT		
TOTAL REVENUES		$	7,650.00
TOTAL EXPENDITURES		$	(75,000.00)
NET INCOME (LOSS) - NFV CAPITAL IMPROVEMENT FUND		$	(67,350.00)
	UNRESTRICTED FUND BALANCE BEGINNING	**$**	**67,842.00**
	UNRESTRICTED FUND BALANCE ENDING	**$**	**492.00**

hereunder, submission of As-Built Drawings, statement of costs, completion of an appropriate bill of sale dated subsequent to the expiration of the 24-month warranty period, and compliance with any other applicable requirements contained herein, the Town shall conditionally accept the systems.

B. Collection Main – Shall mean an eight-inch (8") or smaller diameter pipe and appurtenances receiving wastewater being a part of the Wastewater System.

C. Consulting Engineer – Shall mean the Developer's authorized utility Design Engineer.

D. Contractor – Shall mean any person, firm, or corporation authorized by the Town to perform work and to furnish materials within the Town.

E. Developer – Shall mean any person, corporation, partnership, joint venture, local governmental entity, or other entity.

F. Distribution Main – Shall mean a eight-inch (8") or smaller diameter pipe and appurtenances receiving potable water and conveying it to individual Service Lines.

G. Extensions – Shall mean Town Wastewater and Water System extensions within the Service Area of the Town. Shall further be defined as "Town Mains."

H. Inspector – Shall mean an authorized representative of the Town and/or Town's Engineer at the site of work and the person(s) duly authorized by the Town to enforce these Specifications.

I. Interceptor Main – Shall mean a Wastewater Pipeline larger than eight-inch (8") and appurtenances receiving wastewater being a part of the Wastewater System. Interceptor Mains are not allowed to be tapped with individual services unless permission is granted by the Town.

J. Service Lines (Water) – Shall mean the pipe, line, or conduit from the Water Main to an individual house or other structure. For properties located within Town limits, ~~T~~the Town shall own and maintain the service line from the main to the meter pit ~~or the property line, whichever is closest to the main~~. Customer shall be responsible for the service line after the meter pit ~~or property line~~. For properties located outside of Town limits, the Customer shall own and maintain the entire service line.

K. Service Line (Sewer) – Shall mean the Wastewater Line extending from the premises up to and including the connection to the public Wastewater Main. The Customer shall own and maintain the entire service line.

L. Town Engineer- Shall mean the Town Engineer or his/her authorized representative acting on behalf of the town.

M. Transmission Main – Shall mean a Water Pipeline larger than an eight-inch (8") diameter pipe and appurtenances receiving potable water and conveying it to Distribution Mains. Transmission Mains are not allowed to be tapped with individual services unless permission is granted by the Town.

N. Water Main or Main – Shall mean any water pipe, line, or portion thereof, owned, or to be transferred for ownership by the Town.

O. Water System – Shall mean all Mains, together with all appurtenances, materials, equipment, and property including services, taps, pump stations, meters, and valves for distributing potable water to individual consumers.

P. Wastewater System – Shall mean Mains, together with all appurtenances, materials, equipment, and property including manholes, services, taps, lift stations, for collecting wastewater from individual customers.

1.7 Abbreviations

A. ANSI – American National Standards Institute

Town of Paonia
214 Grand Avenue
Tuesday, February 10, 2026 6:30 PM
Town Board Agenda
https://us02web.zoom.us/j/81502527392
Meeting ID: 815 0252 7392

Public Participation: Please raise your hand and wait to be recognized by the Mayor, come to the podium and state your name and whether you live in town or out of town. Time limit is 3 minutes, one time per item, there are instructions at the podium for the timer light. Please direct all comments to the Mayor. No responses will be made by staff or Board during the meeting. Please be respectful and help to maintain decorum by not engaging in derogatory and/or demeaning statements or public displays.

A) Roll Call

B) Approval of Agenda

C) Announcements

1) The Town is accepting applications for an open seat on the Zoning Board of Adjustments. The appointment is for a three-year term. The Zoning Board of Adjustments only meets when it there is a Public Hearing for the board. You do not need to be a Town resident to serve on the ZBA. Please have applications in to the Town Clerk by February 18, 2026 at noon.

2) Town Hall will be closed in observance of Presidents' Day on Monday, February 16, 2026.

D) Public Comment
Any topic not included under Actions & Presentations; 3-minute time limit.

E) Consent Agenda

1) January 27, 2026 Regular Board Meeting Minutes

2) Retail Marijuana License Renewal: (4003) North Fork Curators LLC dba Jimmy's Joint

3) February 10, 2026 Disbursements

F) Staff Reports

1) Town Administrator/Treasurer

2) Police Chief

3) Public Works Director

G) Actions & Presentations
Public comments must be related to the agenda item, 3-minute time limit.

1) Consideration of the Final Draft 2026 Construction Standards - *Public Works Director Poulos*

2) Consideration of the Town Acquiring a Police Officer Candidate Employment Contract - *Chief Laiminger*

3) Consideration of IGA between Delta County Road & Bridge for Center Stripe Painting - *Director Poulos*

4) Ratification of the Decision to Extend Construction Inspection Services with the City of Delta for Another Year - *U & P Coordinator Bachran*

5) Consideration of Resolution 03-26 Temporarily Suspending the Tree Board while the Trustees Consider Hiring a Certified Arborist Consultant - *Town Clerk Vetter*

6) Consideration of Approval of Change Order #1 for Additional Inspection Hours for KLM Engineering - *Administrator Wynn*

7) Consideration of the Ad Hoc Short Term Rental Committee's Request for Funds for a Facilitator for Their Meetings - *Administrator Wynn*

8) Consideration of Approval of Agreement with Net2Phone Business Communications for the Town's Phone Systems.- *Town Clerk Vetter*

H) Mayor & Trustee Reports

1) Ad Hoc Short Term Rentals Committee

I) Adjournment

As Adopted by:
Town of Paonia, Colorado
Resolution No. 2017-10 – Amended May 22, 2018

I. Rules of Procedure

Section 1. Schedule of Meetings. Regular Board of Trustees meetings shall be held on the second and fourth Tuesdays of each month, except on legal holidays, or as re-scheduled or amended and posted on the agenda prior to the scheduled meeting.

Section 2. Officiating Officer. The meetings of the Board of Trustees shall be conducted by the Mayor or, in the Mayor's absence, the Mayor Pro-Tem. The Town Clerk or a designee of the Board shall record the minutes of the meetings.

Section 3. Time of Meetings. Regular meetings of the Board of Trustees shall begin at 6:30 p.m. or as scheduled and posted on the agenda. Board Members shall be called to order by the Mayor. The meetings shall open with the presiding officer leading the Board in the Pledge of Allegiance. The Town Clerk shall then proceed to call the roll, note the absences and announce whether a quorum is present. Regular Meetings are scheduled for three hours, and shall be adjourned at 9:30 p.m., unless a majority of the Board votes in the affirmative to extend the meeting, by a specific amount of time.

Section 4. Schedule of Business. If a quorum is present, the Board of Trustees shall proceed with the business before it, which shall be conducted in the following manner. Note that all provided times are estimated:

(a) Roll Call - (5 minutes)
(b) Approval of Agenda - (5 minutes)
(c) Announcements (5 minutes)
(d) Recognition of Visitors and Guests (10 minutes)
(e) Consent Agenda including Approval of Prior Meeting Minutes (10 minutes)
(f) Mayor's Report (10 minutes)
(g) Staff Reports: (15 minutes)
  (1) Town Administrator's Report
  (2) Public Works Reports
  (3) Police Report
  (4) Treasurer Report

(h) Unfinished Business (45 minutes)
(i) New Business (45 minutes)
(j) Disbursements (15 minutes)
(k) Committee Reports (15 minutes)
(l) Adjournment

* This schedule of business is subject to change and amendment.

Section 5. Priority and Order of Business. Questions relative to the priority of business and order shall be decided by the Mayor without debate, subject in all cases to an appeal to the Board of Trustees.

Section 6. Conduct of Board Members. Town Board Members shall treat other Board Members and the public in a civil and polite manner and shall comply with the Standards of Conduct for Elected Officials of the Town. Board Members shall address Town Staff and the Mayor by his/her title, other Board Members by the title of Trustee or the appropriate honorific (i.e.: Mr., Mrs. or Ms.), and members of the public by the appropriate honorific. Subject to the Mayor's discretion, Board Members shall be limited to speaking two times when debating an item on the agenda. Making a motion,

asking a question or making a suggestion are not counted as speaking in a debate.

Section 7. Presentations to the Board. Items on the agenda presented by individuals, businesses or other organizations shall be given up to 5 minutes to make a presentation. On certain issues, presenters may be given more time, as determined by the Mayor and Town Staff. After the presentation, Trustees shall be given the opportunity to ask questions.

Section 8. Public Comment. After discussion of an agenda item by the Board of Trustees has concluded, the Mayor shall open the floor for comment from members of the public, who shall be allowed the opportunity to comment or ask questions on the agenda item. Each member of the public wishing to address the Town Board shall be recognized by the presiding officer before speaking. Members of the public shall speak from the podium, stating their name, the address of their residence and any group they are representing prior to making comment or asking a question. Comments shall be directed to the Mayor or presiding officer, not to an individual Trustee or Town employee. Comments or questions should be confined to the agenda item or issue(s) under discussion. The speaker should offer factual information and refrain from obscene language and personal attacks.

Section 9. Unacceptable Behavior. Disruptive behavior shall result in expulsion from the meeting.

Section 10. Posting of Rules of Procedure for Paonia Board of Trustees Meetings. These rules of procedure shall be provided in the Town Hall meeting room for each Board of Trustees meeting so that all attendees know how the meeting will be conducted.

II. Consent Agenda

Section 1. Use of Consent Agenda. The Mayor, working with Town Staff, shall place items on the Consent Agenda. By using a Consent Agenda, the Board has consented to the consideration of certain items as a group under one motion. Should a Consent Agenda be used at a meeting, an appropriate amount of discussion time will be allowed to review any item upon request.

Section 2. General Guidelines. Items for consent are those which usually do not require discussion or explanation prior to action by the Board, are non-controversial and/or similar in content, or are those items which have already been discussed or explained and do not require further discussion or explanation. Such agenda items may include ministerial tasks such as, but not limited to, approval of previous meeting minutes, approval of staff reports, addressing routine correspondence, approval of liquor licenses renewals and approval or extension of other Town licenses. Minor changes in the minutes such as non-material Scribner errors may be made without removing the minutes from the Consent Agenda. Should any Trustee feel there is a material error in the minutes, they should request the minutes be removed from the Consent Agenda for Board discussion.

Section 3. Removal of Item from Consent Agenda. One or more items may be removed from the Consent Agenda by a timely request of any Trustee. A request is timely if made prior to the vote on the Consent Agenda. The request does not require a second or a vote by the Board. An item removed from the Consent Agenda will then be discussed and acted on separately either immediately following the consideration of the

Consent Agenda or placed later on the agenda, at the discretion of the Board.

III. Executive Session

Section 1. An executive session may only be called at a regular or special Board meeting where official action may be taken by the Board, not at a work session of the Board. To convene an executive session, the Board shall announce to the public in the open meeting the topic to be discussed in the executive session, including specific citation to the statute authorizing the Board to meet in an executive session and identifying the particular matter to be discussed "in as much detail as possible without compromising the purpose for which the executive session is authorized." In the event the Board plans to discuss more than one of the authorized topics in the executive session, each should be announced, cited and described. Following the announcement of the intent to convene an executive session, a motion must then be made and seconded. In order to go into executive session, there must be the affirmative vote of two thirds (2/3) of Members of the Board.

Section 2. During executive session, minutes or notes of the deliberations should not be taken. Since meeting minutes are subject to inspection under the Colorado Open Records Act, the keeping of minutes would defeat the private nature of executive session. In addition, the deliberations carried out during executive session should not be discussed outside of that session or with individuals not participating in the session. The contexts of an executive session are to remain confidential unless a majority of the Trustees vote to disclose the contents of the executive session.

Section 3. Once the deliberations have taken place in executive session, the Board should reconvene in regular session to take any formal action decided upon during the executive session. If you have questions regarding the wording of the motion or whether any other information should be disclosed on the record, it is essential for you to consult with the Town Attorney on these matters.

IV. Subject to Amendment

Section 1. Deviations. The Board may deviate from the procedures set forth in this Resolution, if, in its sole discretion, such deviation is necessary under the circumstances.
Section 2. Amendment. The Board may amend these Rules of Procedures Policy from time to time.

Town of Paonia
214 Grand Avenue
Tuesday, January 27, 2026 6:30 PM
Town Board Meeting Minutes

RECORD OF PROCEEDINGS

Mayor Smith calls the meeting to order at 6:30 PM.

A) **Roll Call**

Present:
Mayor Smith
Mayor Pro-Tem Stelter
Trustee Czech
Trustee Hunter
Trustee Mejorado
Trustee Tarnow

Absent:
Trustee Heck (excused)

B) **Approval of Agenda**

Trustee Hunter makes a motion to approve the agenda. Seconded by Mayor Pro-Tem Stelter.

The motion carries unanimously.

Mayor Smith asks for any announcements from Board members since the placeholder for them was not on the agenda. There were no announcements made.

C) **Public Comment**

No public comments.

D) **Consent Agenda**

Trustee Tarnow makes a motion to approve the Consent Agenda. Seconded by Mayor Pro-Tem Stelter.

The motion carries unanimously.

E) **Staff Reports**

1) Department Score Card – Town Administrator

Town Administrator Wynn provided a financial update including January budget-to-actuals, grant activity, bank balances, audit status, and implementation of cloud-hosted financial software.

2) Election Update - Town Clerk

Town Clerk Vetter provided an election update noting six (6) candidates for Board positions, the deadline for write-in candidates, and the upcoming ballot order drawing on February 5th at 2:00 PM in the Town Hall Community Room.

F) **Actions & Presentations**

1) Presentation - Watershed Ready Action Plan Update - Western Slope Conservation Center

The Board received a presentation from Jake Hartter, Stewardship Program Director, of the Western Slope Conservation Center, on the Watershed Wildfire Ready Action Plan, outlining post-fire hazard analysis, risk modeling, and next steps toward susceptibility analysis and stakeholder planning.

No action was taken.

2) Ratification of Decision to Appoint Nicki Poulos as the Town Representative for the North Fork Farmers Ditch Association as Authorized Voting Representative for the Shareholder Meeting That Took Place on 1/24/2026.

The Board discussed that the appointment of Public Works Director Poulos was made prior to the January 24, 2026 North Fork Farmers Ditch Association shareholder meeting due to timing constraints, and the Board's action tonight is solely to formally ratify that prior authorization.

Mayor Pro-Tem Stelter makes a motion to ratify the decision to appoint Public Works Director Poulos as the Town representative to the North Fork Farmers Ditch Association as authorized voting representative for shareholder meeting that took place on 01/24/2026. Seconded by Trustee Czech.

The motion carries unanimously.

3) Ratification of Contract Amendment for Cloud Hosting Services for the Caselle+ System - $400 Additional per Month with a total of $4,800 Additional a Year.

The Board discussed that the Caselle+ cloud hosting amendment supports real-time budget access, improved financial tracking, and system redundancy, that the cost was already budgeted and within the Town Administrator's authority, and that formal ratification was required because it amended an existing contract.

Trustee Tarnow makes a motion to ratify the contract amendment for cloud hosting services through Cassell and system for $400 additional a month, for a total of $4,800 additional a year. Seconded by Trustee Hunter.

The motion carries unanimously.

4) Consideration of Service Agreement with Wright Water Engineers as WaterSMART Consultant.

The Board discussed that the Wright Water Engineers service agreement establishes the WaterSMART consultant services through September 2027 in the amount of $511,876, includes updated insurance limits, indemnification, and statutory compliance language reviewed by the Town Attorney, and does not alter the previously approved scope or pricing. Trustee Tarnow raised a question about whether trained or affiliated volunteers could potentially assist with limited data collection or monitoring tasks. Town Administrator Wynn noted that any volunteer involvement would require coordination with Wright Water Engineers and approval under the federal grant requirements and would investigate it.

Trustee Czech makes a motion to approve the service agreement with Wright Water Engineers, as provided in our amended contract with them, through September of 2027 for the amount of $511,876. Seconded by Mayor Pro-Tem Stelter.

The motion carries unanimously.

5) Consideration of Approval of Master Services Agreement with Consor North America Inc for Safe Streets for All Consultant.

The Board discussed that the Consor North America master services agreement for the Safe Streets for All program sets consultant services through May 2027 in the amount of $367,432, includes revised indemnification language acceptable to the Town Attorney, and would be finalized with updated contract formatting and insurance provisions consistent with the Town's standard agreements.

Trustee Hunter makes a motion to approve the master services agreement with Consor North America, Inc. for Safe Streets for All consultant services through May 2027 in the amount of $367,432, with the professional services agreement revised to follow the same format and statutory language as the Wright Water contract discussed earlier, and with the two requested changes to the indemnification provisions as approved by the Town Attorney. Seconded by Mayor Pro-Tem Stelter.

The motion carries unanimously.

6) Consideration of Approval of a Master Services Agreement with Urban Rural Continuum to prepare a SB24-174 Compliance Addendum to the 2023 Housing Needs Assessment and Housing Action Plan.

The Board discussed that the master services agreement with Urban Rural Continuum will add the specific analyses required by Senate Bill 24-174 to the Town's 2023 Housing Needs Assessment, including accessible and supportive housing needs, displacement risk, population and demographic projections from the State Demography Office, and alignment with recent statutory changes, that DOLA authorized a sole-source contract and provided a $7,500 grant toward the work, and that the agreement does not obligate the Town to expand or amend the Housing Action Plan beyond the required compliance addendum.

Mayor Pro-Tem Stelter makes a motion to approve the master services agreement through December 31, 2026, with Urban Rural Continuum to prepare an SB 24-174 Compliance Addendum to the 2023 Housing Needs Assessment and Housing Action

Plan with a not to exceed price of $10,000. Seconded by Trustee Czech.

The motion carries unanimously.

7) Consideration of Change Order #3 2MG Tank Relining Project for Markleys Precision Company to Remobilize with Heaters and Dehumidifiers.

The Board discussed that Change Order No. 3 for the 2-Million-Gallon tank relining project allows Markley's Precision Company to remobilize in winter conditions using additional indirect heaters and dehumidifiers to maintain required temperatures for liner adhesion and curing, addresses delays related to weather and contractor scheduling, and is necessary to keep the project moving toward completion within the existing contract timeframe.

Public Comment:

M. Durlin: inquired about timeline, scheduling, and any additional change orders.

Trustee Hunter makes a motion to approve MPC's Change Order Number Three in the amount of $27,270. Seconded by Trustee Tarnow.

The motion carries unanimously.

8) Consideration of Renewing Axon Contract with Two Additional Taser Devices.

The Board discussed renewing the Axon Taser contract to add two additional devices so all sworn officers are equipped, reviewed training, policy oversight, and data storage requirements, and noted the proposal price changed by $0.83 due to an updated quote issued after the original expiration date, resulting in a revised total contract cost of $37,772.95 over five years.

Trustee Tarnow makes a motion to recommend the renewal of the Axon Taser contract for 60 months with the purchase of two (2) additional Axon Taser Conducted Energy devices. Seconded by Trustee Czech.

The motion carries unanimously.

9) Consideration of Approval to Purchase One Additional Body Worn Camera.

The Board discussed purchasing one additional Axon body-worn camera to ensure full staffing coverage and compliance with SB 217 requirements, reviewed policy and data storage obligations, and noted the proposal price decreased by $26.26 because a revised quote was issued after the original quote expired, resulting in an updated total cost of $6,546.40 over the contract term.

Trustee Mejorado makes a motion of the addition of one (1) Axon Body Worn Camera to our existing Axon BWC contract. Seconded by Mayor Pro-Tem Stelter.

The motion carries unanimously.

DRAFT

10) Consideration of *Amending Something Previously Adopted* in Reference to the Setting of an Agenda Item for the First Meeting in February to Discuss the Twin Lakes Property.

The Board discussed a request to amend a prior action that scheduled discussion of the Twin Lakes property for the first Board of Trustees meeting in February. Town Clerk Vetter explained that the request came from community members interested in the property who asked that the discussion be moved to the second February meeting so they could attend in person. The Board reviewed the procedural requirements under Robert's Rules of Order, noting that because the original scheduling had already been adopted, amending it required a two-thirds vote. Trustees discussed that moving the agenda item would not disadvantage the Town, would not change the substance of the discussion, and was solely a scheduling accommodation.

Trustee Hunter makes a motion to amend the motion made and passed at the January 13, 2026, Regular meeting by substituting the 'second Board of Trustees meeting in February' in place of the 'first Board of Trustees meeting in February'. Seconded by Trustee Tarnow.

Voting Aye:
Mayor Pro-Tem Stelter
Trustee Czech
Trustee Hunter
Trustee Mejorado
Trustee Tarnow

Voting Nay:
None

The motion carries.

11) Appointing Stefen Wynn as the Town Representative for the Stewart Ditch and Reservoir Company for the Shareholder Meeting on February 3, 2026.

The Board discussed that the Town holds shares in the Stewart Ditch and Reservoir Company and must formally designate a representative to attend and vote at the February 3, 2026 shareholder meeting, and that appointing the Town Administrator ensures the Town's interests are represented without using a proxy.

Trustee Tarnow makes a motion that we appoint Stefen Wynn as the Town representative for the Stewart Ditch and Reservoir Company for the shareholder meeting on February 3, 2026. Seconded by Mayor Pro-Tem Stelter.

The motion carries unanimously.

12) Consideration of Adoption of Resolution 02-26 Holiday Office Closures.

The Board discussed Resolution 02-26 establishing the Town's 2026 holiday office closure schedule, noting that no new holidays were added from the prior year and clarifying the correct observance date for New Year's Day.

Mayor Pro-Tem Stelter makes a motion to approve Resolution 02-26. Seconded by Trustee Hunter.

The motion carries unanimously.

G) **Executive Session**

1) Executive Session for discussion of a personnel matter under C.R.S. 24-6-402(2)(f) regarding Town Administrator Stefen Wynn's 2026 Merit Increase, and not involving: any specific employees who have requested discussion of the matter in open session; any member of this body or any elected official; the appointment of any person to fill an office of this body or of an elected official; or personnel policies that do no require the discussion of matters personal to particular employees.

Mayor Pro-Tem Stelter makes a motion to go into Executive Session for discussion of a personnel matter under C.R.S. 24-6-402(2)(f) regarding Town Administrator Stefen Wynn's 2026 Merit Increase, and not involving: any specific employees who have requested discussion of the matter in open session; any member of this body or any elected official; the appointment of any person to fill an office of this body or of an elected official; or personnel policies that do no require the discussion of matters personal to particular employees. Seconded by Trustee Hunter.

The motion carries unanimously.

Before going into Executive Session, Trustee Hunter makes a motion for a 5-minute recess. Seconded by Mayor Pro-Tem Stelter.

The motion carries unanimously.

The Board goes into recess at 7:58 PM and reconvenes at 8:03 PM.

The Board goes into Executive Session at 8:04 PM.

Executive Session concludes at 8:11 PM. Attendees included Mayor Smith, Mayor Pro-Tem Stelter, Trustee Czech, Trustee Hunter, Trustee Mejorado, Trustee Tarnow, Town Administrator Wynn, Town Clerk Vetter, and Town Attorney Buchner.

Following the Executive Session, Mayor Smith reported that Trustee merit evaluation forms for Town Administrator Wynn were reviewed and averaged by the Town Attorney, resulting in a composite score of 45 points, which falls within the 45–50 range indicating a strong merit increase recommendation under the listed Merit Scorecard Ranges. Based on this score, the Board confirmed a 3% merit increase, establishing the Town Administrator's 2026 salary at $131,536.17, with the increase allocated across funds as follows: 25% Administration, 35% Water Operations, 35% Wastewater Operations, and 5% Sanitation Operations. No additional action was

DRAFT

taken.

H) **Mayor & Trustee Reports**

1) Ad Hoc Short Term Rentals Committee

It was announced that the STR Committee will be resuming meetings now that the committee is fully appointed, with the first meeting scheduled for Thursday, January 29, 2026, at 5:00 PM.

I) **Adjournment**

Mayor Smith adjourns the meeting at 8:14 PM.

_____ _____

Samira M. Vetter, Town Clerk Paige Smith, Mayor

DRAFT

TOWN OF PAONIA
BOARD OF TRUSTEES MEETING
STAFF REPORT

AGENDA ITEM:	**Consent Agenda** • Retail Marijuana License Renewal: (4003) North Fork Curators LLC dba Jimmy's Joint
SUBMITTED BY:	Ruben Santiago – Deputy Clerk
DATE:	02/06/2026
BACKGROUND:	**Finding of Facts:** • License Renewal Paperwork is in the possession of the Town Clerk • Local fees have been paid and the Colorado Dept. of Revenue's fees were paid online. A copy of the payment receipt is in custody of the Town Clerk. • The Administrative Offices have no issues or concerns with the license renewal. • The Police Department has no issues or concerns with the license renewal. • The Public Works department has no issues or concerns with the renewal. • Additional explanation of the application is necessary, particularly given that it was originally submitted in 2023 and is now three years old. Marijuana licenses are issued by the State and subsequently forwarded to the Town for local review. The Town did not approve the local license until immediately prior to the business opening, as a final inspection was required to confirm that the floor plan and site maps remained consistent with the materials previously approved. The State issues marijuana licenses on a two-year cycle, while the Town issues local licenses on an annual basis. This difference in licensing timelines explains why no new application materials have been submitted.
BUDGET:	$ 2,375.00 to – 10-32-10 – Marijuana Licenses & Renewals

RECOMMENDATION:	All legal requirements have been met for the renewal of this license.
ATTACHMENT:	• Retail Marijuana License Application

PAONIA
C·O·L·O·R·A·D·O

Marijuana License Application Checklist

Applications must be complete. Please organize your application documents in the same order as the checklist below and place the checklist on top. Please do not use staples in any documents.

Required Documentation

11-1-2023 Date you filed or will file an application with the Colorado Marijuana Enforcement Division.[1] Rcvd SMV

X Town of Paonia Marijuana License Application and all applicable fees Rcvd 11/15 SMV

X A set of fingerprints for each Controlling Owner. Fingerprints may be scheduled and obtained via the Paonia Police Department. Fingerprints will be run for a criminal background check. Please contact the Police Department to schedule at 970-527-4822. SMV

X Completed copy of State of Colorado Marijuana License Application Packet, including a Site Development Plan SMV Rcvd 11/15

X Odor mitigation plan SMV

X Business plan SMV

X Sign design specifications, including drawings or photos, including size, height and location SMV

X Proof of Ownership of the proposed location in the name of the business, or a lease in the business name showing possession of one year (deed, lease, rental agreement or other appropriate documentation) SMV

X Floor plan of the facility, to scale, no larger than 8 ½ x 11-inch paper, identifying walls, fixtures, countertops and entrances SMV

X Copy of State of Colorado Sales Tax License SMV

X Articles of Organization and Operating Agreement (if LLC) SMV

[1] Any Town licensed store must open within sixty days of issuance of license.

n/a Articles of Incorporation and Bylaws (if corporation)

X Certificate of Good Standing from jurisdiction where Entity was formed (must be a U.S. or country that authorizes the sale of marijuana) SM ✓

X Documentation evidencing authority for applicant to apply on behalf of owners with more than twenty-five percent (25%) ownership in license SM ✓

X Certification that Applicant and all individual Controlling Owners are not prohibited from becoming a licensee due to violating provisions of C.R.S. 44-10-307 SM ✓

Marijuana License Application

Business Information

Applicant Name: Susan Kaldis

Applicant Address: [redacted]

Applicant Phone: [redacted] Applicant Email: northforkcurators@gmail.com

Applicant is: ☐ Agent ☒ Owner

Legal Business/Licensee Name: North Fork Curators, LLC

Trade Name (DBA): Jimmy's Joint

Business is applying for (check all that apply):

☒ Retail Marijuana Store ☐ Medical Marijuana Store ☐ Both
☐ Delivery – Medical ☐ Delivery – Retail ☐ Change in Location
☐ Change in Entity Structure ☐ License Renewal ☐ Transfer of Ownership
☐ Major Modification of Premises

Business is a:

☐ Corporation ☐ Individual ☐ Partnership ☒ LLC ☐ Association ☐ Other

Physical Address of Proposed Location: 119 Grand Ave, Paonia, CO 81428

Mailing Address: PO Box 694, Paonia, CO 81428

Business Phone Number: 970-275-0552 Business Website: jimmysjointco.com

Will you provide online ordering and pick up? x Yes ____ No

Individual Information

***Each Controlling Owner with at least 25% financial interest in the business whose name the license is in, including sub entity owners, must complete this portion of the application and include a copy of valid identification. ***

Full Name: Susan Kaldis

Title & Role in the Business: Co-Owner, CEO, Marketing Director

Cell/Home Phone Number: [redacted] Work Phone Number: _____

Email Address: northforkcurators@gmail.com

Full Physical Address where you reside: [redacted]

Dates you have lived at this address: From Oct 2019 To Present

Full Mailing Address, if different: _____

List complete physical addresses for past 5 years of residency and dates you resided there:

[redacted]

Social Security Number: [redacted] Date of Birth: [redacted]

Have you or any domestic or foreign entity that you had any ownership interest in ever owned or applied for a marijuana license in any jurisdiction? ____Yes x No

If yes to the above question, have you ever been subject to any of the following actions: Denial, Surrender, Order to Show Cause, Suspension, Revocation, Settlement or Stipulation? If yes to any action, provide details on a separate sheet, including the jurisdiction, type of action, and date of action.

Have you, or has any domestic or foreign entity that you had any ownership interest in, ever been found to have violated state or local marijuana regulations, or been subject to paid late fees or fines. ____Yes x No

If yes to the above question, provide details on a separate sheet, including the jurisdiction, type of action, and date of action.

In the past three years have you, or has any domestic or foreign entity that you had any ownership interest in, been delinquent in the remittance of any local or state sales taxes? ____Yes x No

4

If yes to the above question, provide details on a separate sheet, including the jurisdiction and the remediation of the issue.

Individual Information

***Each Controlling Owner with at least 25% financial interest in the business whose name the license is in, including sub entity owners, must complete this portion of the application and include a copy of valid identification. ***

Full Name: Peter Kaldis

Title & Role in the Business: Co-Owner, CFO, Brand Ambassador

Cell/Home Phone Number: [redacted] Work Phone Number: _____

Email Address: [redacted]

Full Physical Address where you reside: [redacted]

Dates you have lived at this address: From August 2022 To Present

Full Mailing Address, if different: _____

List complete physical addresses for past 5 years of residency and dates you resided there:

[redacted]

Social Security Number: [redacted] Date of Birth: [redacted]

Have you or any domestic or foreign entity that you had any ownership interest in ever owned or applied for a marijuana license in any jurisdiction? ____Yes x No

If yes to the above question, have you ever been subject to any of the following actions: Denial, Surrender, Order to Show Cause, Suspension, Revocation, Settlement or Stipulation? If yes to any action, provide details on a separate sheet, including the jurisdiction, type of action, and date of action.

Have you, or has any domestic or foreign entity that you had any ownership interest in, ever been found to have violated state or local marijuana regulations, or been subject to paid late fees or fines. ____Yes x No

If yes to the above question, provide details on a separate sheet, including the jurisdiction, type of action, and date of action.

In the past three years have you, or has any domestic or foreign entity that you had any ownership interest in, been delinquent in the remittance of any local or state sales taxes? ____Yes x No

If yes to the above question, provide details on a separate sheet, including the jurisdiction and the remediation of the issue.

PAONIA
C•O•L•O•R•A•D•O

Applicant Certification

Applicant / Owner certifies and affirms that (initial all):

SK I have read Article 4 (ordinance 2021-01) of the Paonia Municipal Code regarding medical and retail marijuana regulations.

SK I am at least 21 years old

SK I understand that the Town of Paonia makes no promises in connection with this application and all application fees are nonrefundable.

SK I understand that federal laws concerning possession and distribution of controlled substances apply and the Town accepts no legal liability for approval and licensing of marijuana stores.

SK I understand that other than personal identifying information, this application and its accompanying documents are subject to Colorado Open Records Act.

SK I understand that no major changes to the license or the licensed premises may occur without a modification to the license, including a change of ownership structure.

SK **I am granted full authority to act concerning this application filed for legal business/licensee on behalf of all controlling owners, including the submittal of this application under written authority, a copy of which has been provided.**

SK **I declare under penalty of perjury that all of the information contained in this application and all attachments are true, correct and complete to the best of my knowledge, information and belief.**

SK **I agree to indemnify and hold the Town harmless from any and all damages in connection with this application, including all damages in connection with this application, including paying for all Town Attorney fees and costs incurred as a result of any damage claim made against the Town.**

Signature [redacted] Date: 10-24-2023

Printed Name Susan Kaldis

COLORADO
Department of Revenue
Marijuana Enforcement Division

Regulated Marijuana Business License Application

Marijuana Enforcement Division

DR 8548 (05/26/22)

Colorado Marijuana Enforcement Division

Regulated Marijuana Business License Application Instructions

APPLICATION CHECKLIST

☒ *1* **Application Fully Completed**

Type or clearly print, in English, an answer to every question. If a question does not apply, indicate with an N/A. If the available space is insufficient, continue on a separate sheet and precede each answer with the appropriate title. An applicant is prohibited from operating a Regulated Marijuana Business prior to obtaining all necessary approvals or licenses from both the State Licensing Authority and the local jurisdiction. **A separate application is required for EACH license type.**

☒ *2* **Application Contents**

- ☒ Disclosure Requirements
- ☒ Main Application
- ☒ Authorization Forms
- ☒ Affirmation of Reasonable Care
- ☐ Publicly Traded Company (PTC) Addendum A
- ☐ Qualified Private Fund (QPF) Addendum B
- ☐ Qualified Institutional Investor (QII) Addendum C
- ☐ Research & Development (Medical only) Addendum D

The disclosure requirements and the main application must be completed in full by all applicants. If this is for a PTC, QPF, QII or R&D, the appropriate addendum must also be completed.

☒ *3* **All Forms Signed & Attached**

The following accompanying forms must be completed, signed and returned by each individual CBO and a representative for each CBO entity with the application:

- ☒ Affirmation & Consent
- ☒ Tax Check Authorization
- ☒ Investigation Authorization / Authorization to Release Information
- ☒ Applicant's Request to Release Information
- ☒ Affirmation of Reasonable Care

☒ *4* **Required Disclosures**

- ☒ **See Application Required Disclosures (page 1 of application)**
- ☒ Upon request by the Division, an Applicant must provide additional information or documents required to process and investigate the application, within seven (7) days of the request. **Please note:** This deadline may be extended for a period of time commensurate with the scope of the request.

☒ *5* **Application and License Fees**

All applications and documentation submitted must be single-sided and on 8.5x11 inch paper.
See fee table on website: *SBG.Colorado.gov/MarijuanaEnforcement*
Application fees remitted to the State Licensing Authority and/or the Department of Revenue, are non-refundable.

- ☒ Submit complete original or scanned application packet. All **Retail** businesses must provide one complete copy along with the applicable fee (see fee schedule). A**dditional fees may be required by the local jurisdiction.**
- ☒ Checks (in the name of the applicant or applicants attorney's trust account), money orders and major credit cards (subject to service charge), are acceptable forms of payment.
- ☒ Mail-in applications can only be paid by check or money order.

You are responsible for knowing who your Local Licensing Authority is. **NO Transfers/Changes of Ownership applications will be accepted until after the state license is issued.**

☒ *6* **Application Submittal**

Applications can be submitted in person or by mail with all attachments and requisite fees:

Marijuana Enforcement Division
1697 Cole Blvd., Suite 200, Lakewood, CO 80401
ATTN: Business Licensing

Note: Incomplete applications will not be processed. Applicants must collect the incomplete application and fees (including those mailed in or delivered via courier), from the Lakewood Office prior to the end of the next business day.

New Business Application Required Disclosures

☐ Consolidated Financial Statements (Must provide Balance Sheet, Income Statement & Cash Flow Statement for the previous calendar year), including auditors reports and footnotes, if applicable. (See separate PTC requirements on PTC Addendum)

☐ Audited (PTC only) ☐ Not Audited

☒ Copy of the Local license application, if required for a Regulated Marijuana Business.

☒ Organizational Chart, including the identity and ownership percentage of all CBO's.

☒ Certificate of Good Standing from jurisdiction where Entity was formed. (Must be U.S. or country that authorizes the sale of marijuana).

☒ Organizational documents including identity and physical address of the registered agent in Colorado.

Organizational Documents (Indicate which document is being provided)

☐ Articles of Incorporation ☐ By-Laws ☐ Shareholder agreement ☒ Operating Agreement for LLC ☐ Partnership Agreement for partnership

Corporate Governance Documents

☐ Required for Publicly Traded Companies ☐ Permitted, but not required for Privately held companies

☒ Proof of Possession of Licensed Property (Indicate which document is being provided)

☐ Deed ☒ Lease ☐ Sublease ☐ Rental Agreement ☐ Contract

☒ Facility Diagrams – Provide a Legible and Accurate diagram for the facility. The diagram must include a plan for the Licensed Premises and a separate plan for the Security/Surveillance, including camera location, number and direction of coverage. If the diagram is larger than 8.5x11 inches, the Applicant must also provide a PDF copy of the diagram.

☒ Licensed Premises ☒ Security and Surveillance

☒ A copy of any contracts, agreements, royalty agreements, equipment leases, financing agreement, security contract or any other IFIH required to be disclosed by Rule 2-230(A)(3).

☒ A copy of any management agreement(s).

☒ Provide a list of any sanctions, penalties, assessments or cease and desist orders.

Addendums:

☐ PTC ☐ QPF ☐ QII ☐ R&D

Glossary of Terms:

RMB - Regulated Marijuana Business
PBO - Passive Beneficial Owner
QII - Qualified Institutional Investor
PTC - Publicly Traded Company
CBO - Controlling Beneficial Owner
IFIH - Indirect Financial Interest Holder
QPF - Qualified Private Fund
R&D - Research and Development

Affirmation of complete application

Signature	Printed Name	Date (MM/DD/YY)
Susan Kaldis THIS FORM MUST BE SIGNED IN ADOBE PRO OR ACROBAT PRO OR Digitally signed by Susan Kaldis Date: 2023.10.26 17:20:48 -06'00' REQUIRED	Susan Kaldis	10/26/23

Marijuana License Number (Leave Blank) 76

Colorado Marijuana Licensing Authority

Regulated Marijuana Business License Application

License Types ☒ New Retail ☐ New Medical

☒ Retail Marijuana Store
☐ Retail Marijuana Products Manufacturer
☐ Retail Marijuana Cultivation Facility
☐ Retail Marijuana Testing Facility
☐ Retail Marijuana Business Operator
☐ Retail Marijuana Transporter
☐ Retail Marijuana Transporter No Premises

☐ Medical Marijuana Store
☐ Medical Marijuana Products Manufacturer
☐ Medical Marijuana Testing Facility
☐ Medical Marijuana Business Operator
☐ Medical Marijuana Transporter
☐ Medical Marijuana Transporter No Premises
☐ Marijuana Research & Development Facility
☐ Medical Marijuana Cultivation Facility

Applicant's Legal Business Name (Please Print): North Fork Curators, LLC

Registered Trade Name (DBA): Jimmy's Joint

Federal Taxpayer ID	Colorado Sales Tax License #	Name of Registered Agent (with CO Secretary of State)
93-2486153	95967125	Susan Kaldis

Physical Address

Street Address of Marijuana Business	Business Phone Number
119 Grand Ave	970-275-0552

City	County	State	ZIP	Email Address
Paonia	Delta	CO	81428	northforkcurators@gmail.com

Mailing Address (if different from Physical Address)

Address	City	State	ZIP
PO Box 694	Paonia	CO	81428

Main Business Contact Person Information

Primary Contact Person for Business	Primary Contact Phone Number
Susan A. Kaldis	[redacted]

Primary Contact Email: northforkcurators@gmail.com

Jurisdiction of Incorporation or Creation of Business Entity	Date (MM/DD/YY)
Paonia, Colorado, USA	10/26/23

If a Corporation, List all Jurisdictions Where the Corporation is Authorized to Conduct Business

n/a

Ownership Structure - Controlling Beneficial Owners with 10% or greater ownership and/or Executive Officers, manag and any other individual that Controls the RMB.

Name		License Number
Susan A. Kaldis		M155815
Business Associated with (Parent business or sub-entity)	Direct Ownership % in Owner Entity	Direct Ownership % in RMB
North Fork Curators, LLC DBA Jimmy's Joint	75%	75%
Name		License Number
Peter D. Kaldis		M155816
Business Associated with (Parent business or sub-entity)	Direct Ownership % in Owner Entity	Direct Ownership % in RMB
North Fork Curators, LLC DBA Jimmy's Joint	25%	25%
Name		License Number
Business Associated with (Parent business or sub-entity)	Direct Ownership % in Owner Entity	Direct Ownership % in RMB
Name		License Number
Business Associated with (Parent business or sub-entity)	Direct Ownership % in Owner Entity	Direct Ownership % in RMB
Name		License Number
Business Associated with (Parent business or sub-entity)	Direct Ownership % in Owner Entity	Direct Ownership % in RMB
Name		License Number
Business Associated with (Parent business or sub-entity)	Direct Ownership % in Owner Entity	Direct Ownership % in RMB
Name		License Number
Business Associated with (Parent business or sub-entity)	Direct Ownership % in Owner Entity	Direct Ownership % in RMB
Name		License Number
Business Associated with (Parent business or sub-entity)	Direct Ownership % in Owner Entity	Direct Ownership % in RMB
Name		License Number
Business Associated with (Parent business or sub-entity)	Direct Ownership % in Owner Entity	Direct Ownership % in RMB
Name		License Number
Business Associated with (Parent business or sub-entity)	Direct Ownership % in Owner Entity	Direct Ownership % in RMB
Name		License Number
Business Associated with (Parent business or sub-entity)	Direct Ownership % in Owner Entity	Direct Ownership % in RMB
Name		License Number
Business Associated with (Parent business or sub-entity)	Direct Ownership % in Owner Entity	Direct Ownership % in RMB

	Yes	No
Are there any outstanding options, warrants or contracts, that may be exercised into an Owner's Interest in the RMB within the next 60 days that would constitute a CBO? *If YES, attach list of persons	☐	☒
Are there any other Persons, other than those listed in the Ownership Structure, that can control the RMB? *If YES, attach list of persons	☐	☒

Printed Legal Business Name	Printed Trade Name (DBA)
North Fork Curators, LLC	Jimmy's Joint

Indirect Financial Interest Holder - List those with 2 or more interests (PBO, lease, Intellectual Property agreements, finance and/or equipment lease agreements, etc.) or loans that are 50% or more of the operating capital as defined in Rule 2-230(A)(3).

Name of Interest Holder	Date of Birth	FEIN/SSN	Address
n/a	n/a	n/a	n/a
List Types of Interests: n/a			
Name of Interest Holder	Date of Birth	FEIN/SSN	Address
List Types of Interests			
Name of Interest Holder	Date of Birth	FEIN/SSN	Address
List Types of Interests			
Name of Interest Holder	Date of Birth	FEIN/SSN	Address
List Types of Interests			

	Yes	No
1. Is the applicant (including any of the partners, if a partnership; members or manager if a limited liability company; or officers, stockholders or directors if a corporation) under the age of twenty-one years?	☐	☒
2. **MEDICAL ONLY** Are the premises to be licensed within 1000 feet of a school (as defined in 10-103(67), alcohol or drug treatment facility, principal campus of a college, university, or seminary, or a residential childcare facility? If YES, then include a copy of a waiver or ordinance from the local jurisdiction where the business is located.	☐	☐
3. Do you have or will you have possession of a licensed premises?	☒	☐
4. Are you a Person (Entity) applying for a license at a location that is currently licensed as a retail food establishment? If YES, provide details on a separate sheet and attach any applicable documents.	☐	☒
5. Is the applicant, the applicant's parent company or any other intermediary business entity delinquent in the payment of any judgments, taxes, interest or penalties due to the Department of Revenue, relating to a Medical or Retail Marijuana Business? If YES, provide details on a separate sheet and attach any documents to prove settlement or resolution of the delinquency.	☐	☒
6. Has a judgment, consent decree, settlement or other disposition related to a violation of federal, state or similar foreign or security law or regulation, ever been filed or entered against the applicant, the applicant's parent company or any other intermediary business entity? If YES, provide details on a separate sheet and attach any applicable documents.	☐	☒
7. In the past year, has the applicant (including any parent companies), been indicted, served with a criminal summons, charged with or convicted of ANY crime or offense in any manner? Include ALL offenses regardless of class of crime or outcome, even if the charges were dismissed or you were found not guilty. If YES, provide details on a separate sheet and attach any applicable documents.	☐	☒
8. Has the applicant filed all Finding of Suitability applications required by the Division? (Attach copy(s) of approval letter(s)).	☒	☐

Local Licensing Authority (To be completed by Applicant)

Local Licensing Authority	Local Licensing Authority contact name
Town Of Paonia	Samira Vetter
Contact Phone	**Contact Email**
970-527-4101	samirav@townofpaonia.com

Does the local licensing authority permit this type of business in their jurisdiction?	Yes	No
	☒	☐

Affirmation & Consent

I/We, Susan Kaldis and Peter Kaldis, as an owner(s) for the applicant business, state under penalty for offering a false instrument for recording pursuant to 18-5-114 C.R.S. that the entire Regulated Marijuana Business License Application statements, attachments, and supporting schedules are true and correct to the best of my/our knowledge and belief, and that this statement is executed with the knowledge that misrepresentation or failure to reveal information requested may be deemed sufficient cause for the refusal to issue a Marijuana license by the State Licensing Authority. Further, I/We am/are aware that later discovery of an omission or misrepresentation made in the above statements may be grounds for denial of the marijuana business application. I/We am/are voluntarily submitting this application to the Colorado Marijuana Licensing Authority, under oath, with full knowledge that I/We may be charged with perjury or other crimes for intentional omissions and misrepresentations pursuant to Colorado law or for offering a false instrument for recording pursuant to 18-5-114 C.R.S. I/We further consent to any background investigation necessary to determine my/our present and continuing suitability and that this consent continues as long as I/We hold a Colorado Marijuana License.

Note: If your check is rejected due to insufficient or uncollected funds, the Department of Revenue may collect the payment amount directly from your banking account(s) electronically.

Print Full Legal Name of Owner clearly below:

Applicant's Legal Business Name: North Fork Curators, LLC		Trade Name (DBA): Jimmy's Joint
Last Name of Owner (Please Print): Kaldis	First Name of Owner: Susan	Middle Name of Owner: [redacted]
Signature: Susan Kaldis — THIS FORM MUST BE SIGNED IN ACROBAT PRO OR READER — Digitally signed by Susan Kaldis Date: 2023.10.26 17:43:50 -06'00' — REQUIRED		Date (MM/DD/YY):
Last Name of Owner (Please Print): Kaldis	First Name of Owner: Peter	Middle Name of Owner: [redacted]
Signature: Peter Kaldis — THIS FORM MUST BE SIGNED IN ACROBAT PRO OR READER — Digitally signed by Peter Kaldis Date: 2023.10.26 17:45:29 -06'00' — REQUIRED		Date (MM/DD/YY): 10/26/23
Last Name of Owner (Please Print): n/a	First Name of Owner:	Middle Name of Owner:
Signature: THIS FORM MUST BE SIGNED IN ACROBAT PRO OR READER — REQUIRED		Date (MM/DD/YY):
Last Name of Owner (Please Print): n/a	First Name of Owner:	Middle Name of Owner:
Signature: THIS FORM MUST BE SIGNED IN ACROBAT PRO OR READER — REQUIRED		Date (MM/DD/YY):

Confidential Document: This document is the property of the Colorado Marijuana State Licensing Authority and the Colorado Marijuana Enforcement Division, and is provided for Official Use Only. This document may not be further reproduced nor its contents disclosed without the written permission of the Division or State Licensing Authority.

Note: If there are more than four (4) owners, please use a second Affirmation & Consent page.

Tax Check Authorization and Request To Release Information

I Susan A. Kaldis am signing this waiver on behalf of North Fork Curators, LLC (the "Applicant/Licensee") to permit the Colorado Department of Revenue and any other state or local taxing authority to release information and documents that would otherwise be confidential. If I am signing this waiver for someone other than myself, I certify that I have the authority to execute this waiver on behalf of the Applicant/Licensee.

The information and documentation obtained pursuant to this waiver will be used in connection with the Applicant/Licensee's application or licensure with the Colorado Marijuana Enforcement Division, which requires proof of compliance with certain tax obligations pursuant to several statutory provisions, including sections 44-10-202(1) and 44-10-307(1)(e), C.R.S. This waiver is made pursuant to section 39-21-113(4), C.R.S.; and any other similar law or ordinance concerning the confidentiality of tax returns and return information. This waiver shall be valid while the application is pending and, if the application is approved, (1) for one year from the date of licensure or; (2) if applying for an employee license under the medical marijuana code, for two years from the date of licensure. If the license is administratively continued pursuant to section 44-10-314, C.R.S., this waiver shall be valid until the state licensing authority takes final action to approve or deny the renewal of the license. Applicant/Licensee agrees to execute a new waiver for each subsequent licensing period in connection with the renewal of any license.

Applicant/Licensee requests that the Colorado Department of Revenue and any other state or local taxing authority release the following information and supporting documentation to the Colorado Marijuana Enforcement Division, which is acting as Applicant's/Licensee's duly authorized representative under section 39-21-113(4), C.R.S., solely to obtain the information specified below.

1. Whether the Applicant/Licensee has failed to file any state tax return with the Colorado Department of Revenue or any other state or local taxing authority by the required due date (determined with regard to any extension(s) of time for filing) for any tax year for which filing of a return might have been required.
2. Whether the Applicant/Licensee has failed to pay any tax, penalty, or interest liability within 30 days of the date on which the Colorado Department of Revenue or any other state or local taxing authority gave notice of the amount due and requested payment.
3. Whether the Applicant/Licensee has entered into a payment plan with the Colorado Department of Revenue or any other state or local taxing authority and whether Applicant/Licensee is current on any payments required by said payment plan.

Applicant/Licensee authorizes the Colorado Department of Revenue and any other state or local taxing authority to release any additional information or documentation necessary to answer the questions above. Applicant/Licensee authorizes the Colorado Marijuana Enforcement Division and its legal representatives to use the information and documentation obtained from the Colorado Department of Revenue and any other state or local taxing authority in any administrative action regarding the application or license. To assist the Colorado Department of Revenue and any other state or local taxing authority locate the tax records, Applicant/Licensee is voluntarily providing the following information (please type or print).

Applicant's Name (Individual/Business)	Social Security Number/Tax Identification Number		
Susan A. Kaldis	[redacted]		
Street Address	City	State	ZIP Code
[redacted]	Paonia	CO	81428
Home Telephone Number	Business/Work Telephone Number		
[redacted]	970-275-3453		
Legal Last Name (Please Print)	Legal First Name	Full Middle Name	
Kaldis	Susa	[redacted]	
Applicant's Signature		Date (MM/DD/YY)	
Susan Kaldis THIS FORM MUST BE SIGNED IN ACCOUNTANT PRO OR STAMPED Digitally signed by Susan Kaldis Date: 2023.10.26 17:48:34 -06'00' REQUIRED		10/26/23	

Investigation Authorization/Authorization to Release Information

I, Susan A. Kaldis, hereby authorize the Colorado Marijuana Licensing Authority, the Marijuana Enforcement Division, (hereafter, the Investigatory Agencies) to conduct a complete investigation into my personal background, using whatever legal means they deem appropriate. I hereby authorize any person or entity contacted by the Investigatory Agencies to provide any and all such information deemed necessary by the Investigatory Agencies. I hereby waive any rights of confidentiality in this regard. I understand that by signing this authorization, a financial record check may be performed. I authorize any financial institution to surrender to the Investigatory Agencies a complete and accurate record of such transactions that may have occurred with that institution, including, but not limited to, internal banking memoranda, past and present loan applications, financial statements and any other documents relating to my personal or business financial records in whatever form and wherever located. I authorize the release of this type of information, even though such information may be designated as "confidential" or "nonpublic" under the provisions of state or federal laws. I understand that by signing this authorization, a criminal history check will be performed. I authorize the Investigatory Agencies to obtain and use from any source, any information concerning me contained in any type of criminal history record files, wherever located. I understand that the criminal history record files contain records of arrests which may have resulted in a disposition other than a finding of guilt (i.e., dismissed charges, or charges that resulted in a not guilty finding). I understand that the information may contain listings of charges that resulted in suspended imposition of sentence, even though I successfully completed the conditions of said sentence and was discharged pursuant to law. I authorize the release of this type of information, even though this record may be designated as "confidential" or "nonpublic" under the provisions of state or federal laws.

The Investigatory Agencies reserve the right to investigate all relevant information and facts to their satisfaction. I understand that the Investigatory Agencies may conduct a complete and comprehensive investigation to determine the accuracy of all information gathered. However, the State of Colorado, Investigatory Agencies, and other agents or employees of the State of Colorado shall not be held liable for the receipt, use, or dissemination of inaccurate information. I, on behalf of the applicant, its legal representatives, and assigns, hereby release, waive, discharge, and agree to hold harmless, and otherwise waive liability as to the State of Colorado, Investigatory Agencies, and other agents or employees of the State of Colorado for any damages resulting from any use, disclosure, or publication in any manner, other than a willfully unlawful disclosure or publication, of any material or information acquired during inquiries, investigations, or hearings, and hereby authorize the lawful use, disclosure, or publication of this material or information. Any information contained within my application, contained within any financial or personnel record, or otherwise found, obtained, or maintained by the Investigatory Agencies, shall be accessible to law enforcement agents of this or any other state, the government of the United States, or any foreign country.

Print Full Legal Name of Owner clearly below:

Applicant's Legal Business Name		Trade Name (DBA)
North Fork Curators, LLC		Jimmy's Joint
Last Name of Owner (Please Print)	**First Name of Owner**	**Middle Name of Owner**
Kaldis	Susan	[redacted]
Signature		**Date** (MM/DD/YY)
Susan Kaldis THIS FORM MUST BE SIGNED IN ACROBAT [illegible] Digitally signed by Susan Kaldis Date: 2023.10.26 17:51:07 -06'00' REQUIRED		10/26/23

Confidential Document: This document is the property of the Colorado Marijuana State Licensing Authority and the Colorado Marijuana Enforcement Division, and is provided for Official Use Only. This document may not be further reproduced nor its contents disclosed without the written permission of the Division or State Licensing Authority.

Applicant's Request to Release Information

TO: (Leave this Blank)	FROM: (Applicant's Printed Name) Susan A. Kaldis

1. I/We hereby authorize and request all persons to whom this request is presented having information relating to or concerning the above named applicant to furnish such information to a duly appointed agent of the Marijuana Enforcement Division whether or not such information would otherwise be protected from the disclosure by any constitutional, statutory or common law privilege.
2. I/We hereby authorize and request all persons to whom this request is presented having documents relating to or concerning the above named applicant to permit a duly appointed agent of the Marijuana Enforcement Division to review and copy any such documents, whether or not such documents would otherwise be protected from disclosure by any constitutional, statutory, or common law privilege.
3. If the person to whom this request is presented is a brokerage firm, bank, savings and loan, or other financial institution or an officer of the same, I/we hereby authorize and request that a duly appointed agent of the Marijuana Enforcement Division be permitted to review and obtain copies of any and all documents, records or correspondence pertaining to me/us, including but not limited to past loan information, notes co-signed by me/us, checking account records, savings deposit records, safe deposit box records, passbook records, and general ledger folio sheets.
4. I/We do hereby make, constitute, and appoint any duly appointed agent of the Colorado Marijuana Enforcement Division, my/our true and lawful attorney in fact for me/us in my/our name, place, stead, and on my/our behalf and for my/our use and benefit:
   (a) To request, review, copy sign for, or otherwise act for investigative purposes with respect to documents and information in the possession of the person to whom this request is presented as I/we might;
   (b) To name the person or entity to whom this request is presented and insert that person's name in the appropriate location in this request:
   (c) To place the name of the agent presenting this request in the appropriate location on this request.
5. I grant to said attorney in fact full power and authority to do, take, and perform all and every act and thing whatsoever requisite, proper, or necessary to be done, in the exercise of any of the rights and powers herein granted, as fully to all intents and purposes as I/we might or could do if personally present, with full power of substitution or revocation, hereby ratifying and confirming all that said attorney in fact, or his substitute or substitutes, shall lawfully do or cause to be done by virtue of this power of attorney and the rights and powers herein granted.
6. This power of attorney ends twenty-four (24) months from the date of execution.
7. The above named applicant has filed with the Colorado Marijuana Licensing Authority an application for a Marijuana license. Said applicant understands that it is seeking the granting of a privilege and acknowledges that the burden of proving its qualifications for a favorable determination is at all times on the applicant.
8. I/We do, for myself/ourselves, my/our heirs, executors, administrators, successors, and assigns, hereby release, remise, and forever discharge the person to whom this request is presented, and his agents and employees from all and all manner or actions, causes of action, suits, debts, judgments, executions, claims, and demands whatsoever, known or unknown, in law or equity, which the applicant ever had, now has, may have, or claims to have against the person to whom this request is being presented or his agents or employees arising out of or by reason of complying with the request.
9. A reproduction of this request by photocopying or similar process shall be for all intents and purposes as valid as the original.

Applicant's Legal Business Name		
North Fork Curators, LLC		
Trade Name (DBA)		
Jimmy's Joint		
Applicant's Last Name (Please Print)	First Name	Full Middle Name
Kaldis	Susan	[redacted]
Signature		Date (MM/DD/YY)
Susan Kaldis THIS FORM MUST BE SIGNED IN ACR Digitally signed by Susan Kaldis Date: 2023.10.26 17:52:17 -06'00' REQUIRED		10/26/23

DR 8548 (05/26/22)

Affirmation & Consent

I, Peter D Kaldis, state under penalty for offering a false instrument for recording pursuant to 18-5-114 C.R.S. that the entire Natural Person Finding of Suitability Application Form, statements, attachments, and supporting schedules are true and correct to the best of my knowledge and belief, and that this statement is executed with the knowledge that misrepresentation or failure to reveal information requested may be deemed sufficient cause for the refusal to issue a Marijuana license by the State Licensing Authority. Further, I am aware that later discovery of an omission or misrepresentation made in the above statements may be grounds for the denial of the Marijuana application. I am voluntarily submitting this application to the Colorado Marijuana Licensing Authority under oath with full knowledge that I may be charged with perjury or other crimes for intentional omissions and misrepresentations pursuant to Colorado law or for offering a false instrument for recording pursuant to 18-5-114 C.R.S. I further consent to any background investigation necessary to determine my present and continuing suitability and that this consent continues as long as I hold a Colorado Marijuana license.

Note: If your check is rejected due to insufficient or uncollected funds, the Department of Revenue may collect the payment amount directly from your banking account electronically.

Print Full Legal Name of Applicant clearly below:

Last Name of Applicant (Please Print)	First Name of Applicant	Middle Name of Applicant
Kaldis	Peter	[redacted]

Signature	Date
[redacted]	10/26/23

Confidential Document: This document is the property of the Colorado Marijuana State Licensing Authority and the Colorado Marijuana Enforcement Division, and is provided for Official Use Only. This document may not be further reproduced nor its contents disclosed without the written permission of the Division or State Licensing Authority.

Tax Check Authorization and Request To Release Information

I Peter D Kaldis am signing this waiver on behalf of Peter D Kaldis (the "Applicant/Licensee") to permit the Colorado Department of Revenue and any other state or local taxing authority to release information and documents that would otherwise be confidential. If I am signing this waiver for someone other than myself, I certify that I have the authority to execute this waiver on behalf of the Applicant/Licensee.

The information and documentation obtained pursuant to this waiver will be used in connection with the Applicant/Licensee's application or licensure with the Colorado Marijuana Enforcement Division, which requires proof of compliance with certain tax obligations pursuant to several statutory provisions, including sections 44-10-202(1) and 44-10-307(1)(e), C.R.S. This waiver is made pursuant to section 39-21-113(4), C.R.S.; and any other similar law or ordinance concerning the confidentiality of tax returns and return information. This waiver shall be valid while the application is pending and, if the application is approved, (1) for one year from the date of licensure or; (2) if applying for an employee license under the medical marijuana code, for two years from the date of licensure. If the license is administratively continued pursuant to section 44-10-314, C.R.S., this waiver shall be valid until the state licensing authority takes final action to approve or deny the renewal of the license. Applicant/Licensee agrees to execute a new waiver for each subsequent licensing period in connection with the renewal of any license.

Applicant/Licensee requests that the Colorado Department of Revenue and any other state or local taxing authority release the following information and supporting documentation to the Colorado Marijuana Enforcement Division, which is acting as Applicant's/Licensee's duly authorized representative under section 39-21-113(4), C.R.S., solely to obtain the information specified below.

1. Whether the Applicant/Licensee has failed to file any state tax return with the Colorado Department of Revenue or any other state or local taxing authority by the required due date (determined with regard to any extension(s) of time for filing) for any tax year for which filing of a return might have been required.
2. Whether the Applicant/Licensee has failed to pay any tax, penalty, or interest liability within 30 days of the date on which the Colorado Department of Revenue or any other state or local taxing authority gave notice of the amount due and requested payment.
3. Whether the Applicant/Licensee has entered into a payment plan with the Colorado Department of Revenue or any other state or local taxing authority and whether Applicant/Licensee is current on any payments required by said payment plan.

Applicant/Licensee authorizes the Colorado Department of Revenue and any other state or local taxing authority to release any additional information or documentation necessary to answer the questions above. Applicant/Licensee authorizes the Colorado Marijuana Enforcement Division and its legal representatives to use the information and documentation obtained from the Colorado Department of Revenue and any other state or local taxing authority in any administrative action regarding the application or license. To assist the Colorado Department of Revenue and any other state or local taxing authority locate the tax records, Applicant/Licensee is voluntarily providing the following information (please type or print).

Applicant's Name (Individual/Business)	Social Security Number/Tax Identification Number		
Peter D Kaldis	[redacted]		
Street Address	City	State	Zip Code
[redacted]	Houston	TX	77005
Home Telephone Number	Business/Work Telephone Number		
[redacted]			
Legal Last Name (Please Print)	Legal First Name	Full Middle Name	
Kaldis	Peter	[redacted]	
Applicant's Signature		Date	
[redacted]		10/26/23	

Investigation Authorization/Authorization to Release Information

I, Peter D Kaldis, hereby authorize the Colorado Marijuana Licensing Authority, the Marijuana Enforcement Division, (hereafter, the Investigatory Agencies) to conduct a complete investigation into my personal background, using whatever legal means they deem appropriate. I hereby authorize any person or entity contacted by the Investigatory Agencies to provide any and all such information deemed necessary by the Investigatory Agencies. I hereby waive any rights of confidentiality in this regard. I understand that by signing this authorization, a financial record check may be performed. I authorize any financial institution to surrender to the Investigatory Agencies a complete and accurate record of such transactions that may have occurred with that institution, including, but not limited to, internal banking memoranda, past and present loan applications, financial statements and any other documents relating to my personal or business financial records in whatever form and wherever located. I authorize the release of this type of information, even though such information may be designated as "confidential" or "nonpublic" under the provisions of state or federal laws. I understand that by signing this authorization, a criminal history check will be performed. I authorize the Investigatory Agencies to obtain and use from any source, any information concerning me contained in any type of criminal history record files, wherever located. I understand that the criminal history record files contain records of arrests which may have resulted in a disposition other than a finding of guilt (i.e., dismissed charges, or charges that resulted in a not guilty finding). I understand that the information may contain listings of charges that resulted in suspended imposition of sentence, even though I successfully completed the conditions of said sentence and was discharged pursuant to law. I authorize the release of this type of information, even though this record may be designated as "confidential" or "nonpublic" under the provisions of state or federal laws.

The Investigatory Agencies reserve the right to investigate all relevant information and facts to their satisfaction. I understand that the Investigatory Agencies may conduct a complete and comprehensive investigation to determine the accuracy of all information gathered. However, the State of Colorado, Investigatory Agencies, and other agents or employees of the State of Colorado shall not be held liable for the receipt, use, or dissemination of inaccurate information. I, on behalf of the applicant, its legal representatives, and assigns, hereby release, waive, discharge, and agree to hold harmless, and otherwise waive liability as to the State of Colorado, Investigatory Agencies, and other agents or employees of the State of Colorado for any damages resulting from any use, disclosure, or publication in any manner, other than a willfully unlawful disclosure or publication, of any material or information acquired during inquiries, investigations, or hearings, and hereby authorize the lawful use, disclosure, or publication of this material or information. Any information contained within my application, contained within any financial or personnel record, or otherwise found, obtained, or maintained by the Investigatory Agencies, shall be accessible to law enforcement agents of this or any other state, the government of the United States, or any foreign country.

Print Full Legal Name of Owner clearly below:

Applicant's Legal Business Name		Trade Name (DBA)
North Fork Curators, LLC		Jimmy's Joint
Last Name of Owner (Please Print)	First Name of Owner	Middle Name of Owner
Kaldis	Peter	[redacted]
Signature [redacted]		Date

Confidential Document: This document is the property of the Colorado Marijuana State Licensing Authority and the Colorado Marijuana Enforcement Division, and is provided for Official Use Only. This document may not be further reproduced nor its contents disclosed without the written permission of the Division or State Licensing Authority.

Applicant's Request to Release Information

TO: (Leave this Blank)	FROM: (Applicant's Printed Name) Peter D Kaldis

1. I/We hereby authorize and request all persons to whom this request is presented having information relating to or concerning the above named applicant to furnish such information to a duly appointed agent of the Marijuana Enforcement Division whether or not such information would otherwise be protected from the disclosure by any constitutional, statutory or common law privilege.

2. I/We hereby authorize and request all persons to whom this request is presented having documents relating to or concerning the above named applicant to permit a duly appointed agent of the Marijuana Enforcement Division to review and copy any such documents, whether or not such documents would otherwise be protected from disclosure by any constitutional, statutory, or common law privilege.

3. If the person to whom this request is presented is a brokerage firm, bank, savings and loan, or other financial institution or an officer of the same, I/we hereby authorize and request that a duly appointed agent of the Marijuana Enforcement Division be permitted to review and obtain copies of any and all documents, records or correspondence pertaining to me/us, including but not limited to past loan information, notes co-signed by me/us, checking account records, savings deposit records, safe deposit box records, passbook records, and general ledger folio sheets.

4. I/We do hereby make, constitute, and appoint any duly appointed agent of the Colorado Marijuana Enforcement Division, my/our true and lawful attorney in fact for me/us in my/our name, place, stead, and on my/our behalf and for my/our use and benefit:

   (a) To request, review, copy sign for, or otherwise act for investigative purposes with respect to documents and information in the possession of the person to whom this request is presented as I/we might;

   (b) To name the person or entity to whom this request is presented and insert that person's name in the appropriate location in this request:

   (c) To place the name of the agent presenting this request in the appropriate location on this request.

5. I grant to said attorney in fact full power and authority to do, take, and perform all and every act and thing whatsoever requisite, proper, or necessary to be done, in the exercise of any of the rights and powers herein granted, as fully to all intents and purposes as I/we might or could do if personally present, with full power of substitution or revocation, hereby ratifying and confirming all that said attorney in fact, or his substitute or substitutes, shall lawfully do or cause to be done by virtue of this power of attorney and the rights and powers herein granted.

6. This power of attorney ends twenty-four (24) months from the date of execution.

7. The above named applicant has filed with the Colorado Marijuana Licensing Authority an application for a Marijuana license. Said applicant understands that it is seeking the granting of a privilege and acknowledges that the burden of proving its qualifications for a favorable determination is at all times on the applicant.

8. I/We do, for myself/ourselves, my/our heirs, executors, administrators, successors, and assigns, hereby release, remise, and forever discharge the person to whom this request is presented, and his agents and employees from all and all manner or actions, causes of action, suits, debts, judgments, executions, claims, and demands whatsoever, known or unknown, in law or equity, which the applicant ever had, now has, may have, or claims to have against the person to whom this request is being presented or his agents or employees arising out of or by reason of complying with the request.

9. A reproduction of this request by photocopying or similar process shall be for all intents and purposes as valid as the original.

Applicant's Last Name (Please Print)	First Name	Full Middle Name
Kaldis	Peter	Denton
Signature: Peter Kaldis		Date: 10/26/23

DR 8520

AFFIRMATION OF REASONABLE CARE – PRIVATE COMPANY

Pursuant to section 44-10-309(4) C.R.S. and Rule 2-230(D), Applicant or Licensee affirms that, prior to submission of this application, it exercised reasonable care to confirm its Passive Beneficial Owners, (including any Qualified Institutional Investors) and Indirect Financial Interest Holders, are not Persons prohibited from being issued or holding a license by section 44-10-307 C.R.S., or otherwise restricted from holding an interest under the Colorado Regulated Marijuana Business Code. An Applicant's or Licensee's failure to exercise reasonable care is a basis for denial, fine, suspension, revocation or other sanction by the State Licensing Authority.

I, Susan A Kaldis, as Controlling Beneficial Owner or Manager for
Print

n/a, state under penalty of perjury, pursuant to §18-8-503, that the foregoing is true and correct to the best of my knowledge, information and belief.

Signature			Date (MM/DD/YY)
Susan Kaldis	THIS FORM MUST BE SIGNED IN [illegible] Digitally signed by Susan Kaldis Date: 2023.10.26 17:53:11 -06'00'	REQUIRED	10/26/23

AFFIRMATION OF REASONABLE CARE – PUBLICLY TRADED CORPORATION

Pursuant to section 44-10-309(5) C.R.S. and Rule 2-230(D), Applicant or Licensee affirms that, prior to submission of this application, it exercised reasonable care to confirm its Non-objecting Passive Beneficial Owner, (including any Qualified Institutional Investors) and Indirect Financial Interest Holders, are not Persons prohibited from being issued or holding a license by section 44-10-307 C.R.S., or otherwise restricted from holding an interest under the Colorado Regulated Marijuana Business Code. An Applicant's or Licensee's failure to exercise reasonable care is a basis for denial, fine, suspension, revocation or other sanction by the State Licensing Authority.

I, n/a, as Controlling Beneficial Owner or Manager for
Print

n/a, state under penalty of perjury, pursuant to §18-8-503, that the foregoing is true and correct to the best of my knowledge, information and belief.

Signature			Date (MM/DD/YY)
Susan Kaldis	THIS FORM MUST BE SIGNED IN [illegible] Digitally signed by Susan Kaldis Date: 2023.10.26 17:43:07 -06'00'	REQUIRED	10/26/23

Addendum A - NEW Business Application

Publicly Traded Company (PTC)

Please provide:

Stock Trading Symbol	Name of Exchange(s) Traded On	NAICS/SIC Code
n/a	n/a	n/a

Identify all regulatory agencies with oversight over the PTC's securities

n.a

Reporting agencies required reports submitted on:

n/a

Date of Registration with the Department of Regulatory Agencies (DORA)	Number
n/a	n/a

Provide a list of any privileged or professional licenses, with license numbers, you have held within the last three (3) years prior to the submission of the finding of suitability request. List those that were issued by the Colorado Department of Revenue or the Department of Regulatory Agencies, including all marijuana licenses. (Separate sheet)

Provide a description of the Publicly Traded Company's business and documents establishing the Publicly Traded Company (PTC) qualifies to hold a RMB license as referenced in section 44-10-103 (50) C.R.S.

Description

n/a

Attach a divestiture plan of any CBO that is prohibited by section 44-10-307 C.R.S., that has had his or her Owner's License revoked or has been found unsuitable.

Attach the most recent list of Non-Objecting Beneficial owners possessed by the PTC.

Identify the type of permitted transaction, i.e. Merger, Investment, or Public Offering and attach all supporting documentation.

Questions

Confirm that the PTC is current with all required filings pursuant to any applicable requirements by any securities regulatory authority including, but not limited to, the United States Securities and Exchange Commission or the Canadian Securities Administrators.

☐ All Current ☐ Not Current (If not, explain on a separate sheet)

Confirm that all mandatory filings for CBO's as required by any securities regulatory authority, including, but not limited to the United States Securities and Exchange Commission or the Canadian Securities Administrators, have been filed and the MED has been provided concurrent notice with the filing. If No, explain on a separate sheet:

☐ YES ☐ NO

Addendum B - NEW Business Application

Qualified Private Fund (QPF)

Please provide:

Identify all regulatory agencies with oversight over the QPF's securities

n/a

Reporting agencies required reports submitted on:

n/a

Date of Registration with the Department of Regulatory Agencies (DORA)	Number
n/a	n/a

Provide a list of any privileged or professional licenses, with license numbers, you have held within the last three (3) years prior to the submission of the finding of suitability request. List those that were issued by the Colorado Department of Revenue or the Department of Regulatory Agencies, including all marijuana licenses. (Separate sheet)

Provide a description of the QPF's business and documents establishing the QPF's qualifies to hold a RMB license.

Description

n/a

Questions

Confirm that the QPF is current with all required filings pursuant to any applicable requirements by any securities regulatory.

☐ All Current ☐ Not Current (If not, explain on a separate sheet)

Confirm that ALL required findings of suitability, including all QPF managers, investment advisers, investment adviser representatives, any trustee or equivalent, and any other person that controls the investment in, or management or operations of, the RMB, have been obtained PRIOR TO the QPF becoming effective. If No, explain on a separate sheet:

☐ YES ☐ NO

Addendum D

MARIJUANA RESEARCH AND DEVELOPMENT FACILITY ONLY (Disregard if you are not applying for an R & D license)	
1. Is the Applicant currently either a Marijuana Research and Development Facility Licensee ("Licensed Research Business")? If yes, attach copies of the Conditional Medical Marijuana Business License issued by the State Licensing Authority, relevant local licensing authority issued license information, and any approved Research Projects.	☐ Yes ☐ No
2. Does the License Research Business or Applicant, or parent or subsidiary of the thereof, possess a Medical Marijuana Testing Facility License issued by the State Licensing Authority? If yes, provide details in a **separate document** that address, at minimum, physical separation requirements of the Licensed Premises and marijuana inventory.	☐ Yes ☐ No
3. Is there a separate Research Project proposal attached to this application that the Licensed Research Business or Applicant intends for the Division to review for its approval determination? a. If yes, proceed to question 4 below. b. If yes, the total application fee paid at the time of submission must include the fee amount for the Licensed Research Business application and Research Project proposal review c. If no, proceed to question 13 below.	☐ Yes ☐ No
4. Does the Research Project proposal contain a description of the proposed Research Project, including at a minimum, the specific authorized research activity for which the Research Project may be authorized, defined protocols, clearly articulated goals, defined methods and outputs, defined start and end date, and the proposed quantity of Medical Marijuana, Medical Marijuana Concentrate, and/or Medical Marijuana-Infused Product reasonably required to conduct the proposed Research Project?	☐ Yes ☐ No
5. In the Research Project proposal, this application, and/or any supplemental document(s), has the Licensed Research Business or Applicant disclosed all Persons who have, are, or will provide any funding for the proposed Research Project, including at a minimum, any Person who has funded or intends to fund the Licensed Research Business and/or proposed Research Project who does not hold a license issued by the State Licensing Authority and is neither a CBO nor a PBO, as an IFIH?	☐ Yes ☐ No
6. In the Research Project proposal and/or any supplemental document(s), is there disclosed any contract or agreement, or memorialization thereof, that has been entered by the Licensed Research Business or Applicant with another Marijuana Research Business or public education research institution to conduct the proposed Research Project? If yes, include copies of any such documents.	☐ Yes ☐ No
7. Is the proposed Research Project to be conducted in whole or in part with a Public Institution or Public Money?	☐ Yes ☐ No
a. If yes, does the Research Project proposal contain all information required by section 44-10-507, C.R.S., and the Rule 5-705 series, 1 CCR 212-3, and in order to permit review of the proposed Research Project by the Scientific Advisory Council?	☐ Yes ☐ No
b. If yes, does the Research Project proposal and/or any supplemental documents include disclosure(s) of any contract or agreement, or memorialization thereof, entered by the Licensed Research Business or Applicant to conduct the proposed Research Project with Public Funds or a Public Institution? If yes, attach copies of each.	☐ Yes ☐ No
8. Is the proposed Research Project to be conducted entirely with private funding?	☐ Yes ☐ No
a. If yes, has the Licensed Research Business or Applicant nominated one or more independent reviewer(s) for the proposed Research Project? If yes, proceed to part (b).	☐ Yes ☐ No
b. If yes, has the Licensed Research Business or Applicant provided in the Research Project proposal and/or other documents proof that each nominated independent reviewer is a qualified researcher in the field of study that's related to the proposed Research Project? If no, the Division will not determine whether the nominated independent reviewer is qualified or review the Research Project proposal. If yes, proceed to part (c).	☐ Yes ☐ No
c. If yes, has the Licensed Research Business or Applicant disclosed all pre-existing financial, employment, business, or personal relationships between the Licensed Research Business or any of its Owner Licensees and each independent reviewer nominee?	☐ Yes ☐ No

9. Does the proposed Research Project involve and/or contemplate any Pesticide research activities?	☐ Yes ☐ No
a. If yes, has the Licensed Research Business or Applicant applied for and received any necessary license, registration, certification, or permit from the Colorado Department of Agriculture? If yes, provide copies or other documentation.	☐ Yes ☐ No
10. Does the proposed Research Project involve and/or contemplate any human subject research activities?	☐ Yes ☐ No
a. If yes, has the Licensed Research Business or Applicant received approval and ongoing oversight and review of all aspects of the proposed Research Project by an Institutional Review Board that is registered and in good standing with the Office for Human Research Projects, United States Department of Health and Human Services? If yes, provide copies and/or other documentation evidencing such approval and oversight.	☐ Yes ☐ No
11. Does the proposed Research Project involve and/or contemplate any animal subject research activities?	☐ Yes ☐ No
a. If yes, has the Licensed Research Business or Applicant provided current registration with the United States Department of Agriculture? If yes, attach a copy.	☐ Yes ☐ No
12. Does the proposed Research Project involve marijuana testing research activities?	☐ Yes ☐ No
a. If yes, has the Licensed Research Business or Applicant provided proof and/or documentation that the applicant is qualified to test Medical Marijuana, Medical Marijuana Concentrate, and/or Medical Marijuana-Infused Products pursuant to at least one of the criteria in Rule 5-720, 1 CCR 212-3?	☐ Yes ☐ No
b. If yes, has the Licensee provided proof and/or documentation that the applicant is qualified to test Medical Marijuana, Medical Marijuana Concentrate, and/or Medical Marijuana-Infused Products pursuant to Rule 5-415, 1 CCR 212-3?	☐ Yes ☐ No
13. If applicant has not attached a separate Research Project proposal to this application, what is the approximate date that the applicant plans to submit to the Division the Research Project proposal? n/a (MM/DD/YY)	
a. If the separate Research Project proposal is the first to be submitted by a Licensed Research Business, then the submission of the Research Project proposal must occur within 12-months from the date the Division issued the Licensed Research Business License.	
b. Any Research Project proposal submitted after this application must be submitted pursuant to the procedures established by the Division.	
c. The fee cost for Division review is due at the time the Research Project proposal is submitted.	
14. Will this business be co-located? (May only be co-located with a commonly owned MMPM, MMC, RMPM or RMC) * If YES, please fill out DR 8542 and include with this application	☐ Yes ☐ No

wc PS

Vendor	Vendor Name	Invoice Number	Description	Invoice Date	Net Invoice Amount	Voided	GL Account and Title	GL Period Date
ADP, INC								
1352	ADP, INC	710690215 AC	Admin Payroll	01/30/2026	65.35		10-41-20 LEGAL, ENGINEERING & PR	12/31/2025
1352	ADP, INC	710690215 AC	PD Payroll	01/30/2026	77.02		10-42-20 LEGAL, ENGINEERING & PR	12/31/2025
1352	ADP, INC	710690215 AC	WasteWater Payroll	01/30/2026	30.34		70-51-20 LEGAL, ENGINEERING & PR	12/31/2025
1352	ADP, INC	710690215 AC	Water Payroll	01/30/2026	30.34		60-50-20 LEGAL, ENGINEERING & PR	12/31/2025
1352	ADP, INC	710690215 AC	Sanitation Payroll	01/30/2026	30.35		80-52-20 LEGAL, ENGINEERING & PR	12/31/2025
	Total ADP, INC:				233.40			
AFLAC								
749	AFLAC	710567	AFLAC ACH	01/26/2026	97.08		10-0225 AFLAC COVERAGE	02/28/2026
	Total AFLAC:				97.08			
AMAZON BUSINESS								
1341	AMAZON BUSINESS	1FMD-T36X-3F	VEHICLE	02/01/2026	55.99		10-45-23 VEHICLE EXPENSE	02/28/2026
1341	AMAZON BUSINESS	1FMD-T36X-3F	SHOP	02/01/2026	46.76		10-45-25 SHOP EXPENSE	02/28/2026
1341	AMAZON BUSINESS	1FMD-T36X-3F	SHOP	02/01/2026	46.75		10-46-25 SHOP EXPENSE	02/28/2026
1341	AMAZON BUSINESS	1FMD-T36X-3F	OPERATING	02/01/2026	186.29		10-46-16 OPERATING SUPPLIES	02/28/2026
1341	AMAZON BUSINESS	1FMD-T36X-3F	VEHICLE	02/01/2026	56.00		10-46-23 VEHICLE EXPENSE	02/28/2026
1341	AMAZON BUSINESS	1FMD-T36X-3F	OPERATING	02/01/2026	39.98		60-50-16 OPERATING SUPPLIES	02/28/2026
1341	AMAZON BUSINESS	1FMD-T36X-3F	SHOP	02/01/2026	46.75		60-50-25 SHOP EXPENSE	02/28/2026
1341	AMAZON BUSINESS	1FMD-T36X-3F	VEHICLE	02/01/2026	56.00		60-50-23 VEHICLE EXPENSE	02/28/2026
1341	AMAZON BUSINESS	1FMD-T36X-3F	VEHICLE	02/01/2026	56.00		70-51-23 VEHICLE EXPENSE	02/28/2026
1341	AMAZON BUSINESS	1FMD-T36X-3F	SHOP	02/01/2026	46.76		70-51-25 SHOP EXPENSE	02/28/2026
1341	AMAZON BUSINESS	1FMD-T36X-3F	VEHICLE	02/01/2026	56.00		80-52-23 VEHICLE EXPENSE	02/28/2026
1341	AMAZON BUSINESS	1FMD-T36X-3F	SHOP	02/01/2026	46.76		80-52-25 SHOP EXPENSE	02/28/2026
1341	AMAZON BUSINESS	1FMD-T36X-3F	OPERATING	02/01/2026	39.98		70-51-16 OPERATING SUPPLIES	02/28/2026
1341	AMAZON BUSINESS	1VLM-W37L-4	OFFICE SUPPLIES	02/01/2026	38.78		10-42-15 OFFICE SUPPLES	02/28/2026
1341	AMAZON BUSINESS	1VLM-W37L-9	OFFICE SUPPLIES	02/01/2026	181.27		10-41-15 OFFICE SUPPLIES	02/28/2026
1341	AMAZON BUSINESS	1VLM-W37L-9	TOWN HALL EXPENSES	02/01/2026	283.93		10-41-25 TOWN HALL EXPENSE	02/28/2026
1341	AMAZON BUSINESS	1VLM-W37L-9	EQUIPMENT	02/01/2026	738.20		10-41-74 MACHINERY & EQUIPMENT	02/28/2026
1341	AMAZON BUSINESS	1VLM-W37L-9	OFFICE SUPPLIES	02/01/2026	65.35		10-42-15 OFFICE SUPPLES	02/28/2026
	Total AMAZON BUSINESS:				2,087.55			
Archuleta, Benny								
1245	Archuleta, Benny	ARCH1-2026	PROFESSIONAL SERVICES	02/01/2026	750.00		60-50-20 LEGAL, ENGINEERING & PR	02/28/2026
1245	Archuleta, Benny	ARCH1-2026	PROFESSIONAL SERVICES	02/01/2026	750.00		70-51-20 LEGAL, ENGINEERING & PR	02/28/2026

Vendor	Vendor Name	Invoice Number	Description	Invoice Date	Net Invoice Amount	Voided	GL Account and Title	GL Period Date
	Total Archuleta, Benny:				1,500.00			
Badger Meter, Inc.								
654	Badger Meter, Inc.	80223692	PILOT PROGRAM	01/29/2026	81.44		60-50-70 CAP OUTLAY-WATER	02/28/2026
	Total Badger Meter, Inc.:				81.44			
Black Hills Energy								
987	Black Hills Energy	2062068612	UTILITIES	02/01/2026	180.69		10-41-28 UTILITIES	02/28/2026
987	Black Hills Energy	2062068612	UTILITIES	02/01/2026	180.68		10-42-28 UTILITIES	02/28/2026
987	Black Hills Energy	2104532605	UTILITIES	02/01/2026	312.90		10-45-28 UTILITIES	02/28/2026
987	Black Hills Energy	2104532605	UTILITIES	02/01/2026	312.90		60-50-28 UTILITIES	02/28/2026
987	Black Hills Energy	2104532605	UTILITIES	02/01/2026	312.90		70-51-28 UTILITIES	02/28/2026
987	Black Hills Energy	2104532605	UTILITIES	02/01/2026	312.90		80-52-28 UTILITIES	02/28/2026
987	Black Hills Energy	2216417876	UTILITIES	02/01/2026	207.19		60-50-28 UTILITIES	02/28/2026
987	Black Hills Energy	5717481710	UTILITIES	02/01/2026	526.49		10-46-28 UTILITIES	02/28/2026
987	Black Hills Energy	6496903535	UTILITIES	02/01/2026	27.25		10-45-28 UTILITIES	02/28/2026
987	Black Hills Energy	6496903535	UTILITIES	02/01/2026	27.26		60-50-28 UTILITIES	02/28/2026
987	Black Hills Energy	6496903535	UTILITIES	02/01/2026	27.26		70-51-28 UTILITIES	02/28/2026
987	Black Hills Energy	6496903535	UTILITIES	02/01/2026	27.26		80-52-28 UTILITIES	02/28/2026
	Total Black Hills Energy:				2,455.68			
Bruin Waste								
1307	Bruin Waste	1652476	OPERATING	02/04/2026	119.75		60-50-16 OPERATING SUPPLIES	02/28/2026
	Total Bruin Waste:				119.75			
Caselle, Inc								
21	Caselle, Inc	INV-16330	ADMIN - CASELLE SUPPORT	02/03/2026	278.25		10-41-33 DATA PROCESSING	02/28/2026
21	Caselle, Inc	INV-16330	PD - CASELLE SUPPORT	02/03/2026	278.25		10-42-33 Data Processing	02/28/2026
21	Caselle, Inc	INV-16330	WATER - CASELLE SUPPORT	02/03/2026	556.50		60-50-33 DATA PROCESSING	02/28/2026
21	Caselle, Inc	INV-16330	WW - CASELLE SUPPORT	02/03/2026	556.50		70-51-33 DATA PROCESSING	02/28/2026
21	Caselle, Inc	INV-16330	SANITATION - CASELLE SUPPO	02/03/2026	556.50		80-52-33 DATA PROCESSING	02/28/2026
	Total Caselle, Inc:				2,226.00			
Cedar Creek Supply LLC								
1284	Cedar Creek Supply LLC	INV-0726	RENTAL	01/30/2026	1,677.32		70-51-14 CHEMICALS	02/28/2026

Vendor	Vendor Name	Invoice Number	Description	Invoice Date	Net Invoice Amount	Voided	GL Account and Title	GL Period Date
	Total Cedar Creek Supply LLC:				1,677.32			
City of Delta								
24	City of Delta	7	PROF SERV	01/22/2026	376.00		70-51-20 LEGAL, ENGINEERING & PR	02/28/2026
	Total City of Delta:				376.00			
City Of Grand Junction								
673	City Of Grand Junction	104299	PROFESSIONAL SERVICES	01/21/2026	138.00		70-51-20 LEGAL, ENGINEERING & PR	02/28/2026
	Total City Of Grand Junction:				138.00			
CLOW VALVE COMPANY								
1339	CLOW VALVE COMPANY	PRJ-001163	DUES & SUBSCRIPTIONS	01/30/2026	1,200.00		60-50-31 DUES & SUBSCRIPTIONS	02/28/2026
	Total CLOW VALVE COMPANY:				1,200.00			
Colorado Complete Clean LLC								
1450	Colorado Complete Clean LLC	1526	Cleaning Services Admin	02/03/2026	700.00		10-41-20 LEGAL, ENGINEERING & PR	02/28/2026
1450	Colorado Complete Clean LLC	1526	Cleaning Services PD	02/03/2026	175.00		10-42-20 LEGAL, ENGINEERING & PR	02/28/2026
1450	Colorado Complete Clean LLC	1526	Cleaning Services Water	02/03/2026	175.00		60-50-20 LEGAL, ENGINEERING & PR	02/28/2026
1450	Colorado Complete Clean LLC	1526	Cleaning Services Sewer	02/03/2026	175.00		70-51-20 LEGAL, ENGINEERING & PR	02/28/2026
1450	Colorado Complete Clean LLC	1526	Cleaning Services Trash	02/03/2026	175.00		80-52-20 LEGAL, ENGINEERING & PR	02/28/2026
	Total Colorado Complete Clean LLC:				1,400.00			
COUNTRY'S TIRE & AUTO SERVICE								
1340	COUNTRY'S TIRE & AUTO SERV	20064	VEHICLE	07/31/2025	234.31		10-42-23 VEHICLE EXPENSE	12/31/2025
	Total COUNTRY'S TIRE & AUTO SERVICE:				234.31			
Delta County Landfill								
56	Delta County Landfill	JAN 2026 STA	Landfill Fee	01/31/2026	2,757.75		80-52-42 LANDFILL FEES	02/28/2026
	Total Delta County Landfill:				2,757.75			
Delta Montrose Electric Assn.								
43	Delta Montrose Electric Assn.	JAN 2026	UTILITIES	02/01/2026	255.71		10-41-28 UTILITIES	02/28/2026
43	Delta Montrose Electric Assn.	JAN 2026	UTILITIES	02/01/2026	130.48		10-42-28 UTILITIES	02/28/2026

Vendor	Vendor Name	Invoice Number	Description	Invoice Date	Net Invoice Amount	Voided	GL Account and Title	GL Period Date
43	Delta Montrose Electric Assn.	JAN 2026	UTILITIES	02/01/2026	758.32		10-45-28 UTILITIES	02/28/2026
43	Delta Montrose Electric Assn.	JAN 2026	UTILITIES	02/01/2026	832.87		10-46-28 UTILITIES	02/28/2026
43	Delta Montrose Electric Assn.	JAN 2026	UTILITIES	02/01/2026	1,330.77		60-50-28 UTILITIES	02/28/2026
43	Delta Montrose Electric Assn.	JAN 2026	UTILITIES	02/01/2026	4,126.71		70-51-28 UTILITIES	02/28/2026
43	Delta Montrose Electric Assn.	JAN 2026	UTILITIES	02/01/2026	66.17		80-52-28 UTILITIES	02/28/2026
	Total Delta Montrose Electric Assn.:				7,501.03			
Dependable Lumber, Inc.								
46	Dependable Lumber, Inc.	JAN 2026 STA	SHOP	01/31/2026	12.73		10-45-25 SHOP EXPENSE	02/28/2026
46	Dependable Lumber, Inc.	JAN 2026 STA	OPERATING	01/31/2026	21.99		10-46-16 OPERATING SUPPLIES	02/28/2026
46	Dependable Lumber, Inc.	JAN 2026 STA	MAINT	01/31/2026	15.99		10-46-22 REPAIRS & MAINTENANCE	02/28/2026
46	Dependable Lumber, Inc.	JAN 2026 STA	SHOP	01/31/2026	12.74		10-46-25 SHOP EXPENSE	02/28/2026
46	Dependable Lumber, Inc.	JAN 2026 STA	OPERATING	01/31/2026	20.28		60-50-16 OPERATING SUPPLIES	02/28/2026
46	Dependable Lumber, Inc.	JAN 2026 STA	SHOP	01/31/2026	12.74		60-50-25 SHOP EXPENSE	02/28/2026
46	Dependable Lumber, Inc.	JAN 2026 STA	OPERATING	01/31/2026	12.00		70-51-16 OPERATING SUPPLIES	02/28/2026
46	Dependable Lumber, Inc.	JAN 2026 STA	SHOP	01/31/2026	12.74		70-51-25 SHOP EXPENSE	02/28/2026
46	Dependable Lumber, Inc.	JAN 2026 STA	OPERATING	01/31/2026	65.98		80-52-16 OPERATING SUPPLIES	02/28/2026
46	Dependable Lumber, Inc.	JAN 2026 STA	SHOP	01/31/2026	12.74		80-52-25 SHOP EXPENSE	02/28/2026
46	Dependable Lumber, Inc.	JAN 2026 STA	CAPITAL OUTLAY	01/31/2026	69.85		80-52-70 CAPITAL OUTLAY	02/28/2026
	Total Dependable Lumber, Inc.:				269.78			
Elevate Fiber								
986	Elevate Fiber	JAN 2026	Internet	02/01/2026	40.00		10-41-29 TELEPHONE & INTERNET	02/28/2026
986	Elevate Fiber	JAN 2026	INTERNET	02/01/2026	40.00		10-42-29 TELEPHONE & INTERNET	02/28/2026
986	Elevate Fiber	JAN 2026	Internet	02/01/2026	10.00		10-45-29 TELEPHONE & INTERNET	02/28/2026
986	Elevate Fiber	JAN 2026	Internet	02/01/2026	10.00		10-46-29 TELEPHONE & INTERNET	02/28/2026
986	Elevate Fiber	JAN 2026	Internet	02/01/2026	479.31		60-50-29 TELEPHONE & INTERNET	02/28/2026
986	Elevate Fiber	JAN 2026	Internet	02/01/2026	179.91		70-51-29 TELEPHONE & INTERNET	02/28/2026
986	Elevate Fiber	JAN 2026	Internet	02/01/2026	99.96		80-52-29 TELEPHONE & INTERNET	02/28/2026
	Total Elevate Fiber:				859.18			
Empower Trust Company LLC								
1190	Empower Trust Company LLC	FEB 6 2026 PR	Retirement Plan PPE	02/04/2026	3,588.76		10-0220 RETIREMENT PLAN	02/28/2026
	Total Empower Trust Company LLC:				3,588.76			

Vendor	Vendor Name	Invoice Number	Description	Invoice Date	Net Invoice Amount	Voided	GL Account and Title	GL Period Date
ENVIRO-CHEM ANALYTICAL INC								
1221	ENVIRO-CHEM ANALYTICAL IN	1417337	PROFESSIONAL SERVICES	01/28/2026	68.00		70-51-20 LEGAL, ENGINEERING & PR	02/28/2026
	Total ENVIRO-CHEM ANALYTICAL INC:				68.00			
Every Little Detail								
1314	Every Little Detail	059020	VEHICLE	01/15/2026	225.00		10-42-23 VEHICLE EXPENSE	02/28/2026
1314	Every Little Detail	059024	VEHICLE	01/28/2026	175.00		10-42-23 VEHICLE EXPENSE	02/28/2026
	Total Every Little Detail:				400.00			
Fire & Police Pension Assn.								
63	Fire & Police Pension Assn.	FEB 6 2026 PR	Payroll Ending	02/04/2026	3,877.14		10-0219 FPPA	02/28/2026
	Total Fire & Police Pension Assn.:				3,877.14			
Grizzly Grading & Excavation LLC								
1487	Grizzly Grading & Excavation LLC	1005	OPERATING	01/24/2026	533.92		60-50-16 OPERATING SUPPLIES	02/28/2026
1487	Grizzly Grading & Excavation LLC	1005	OPERATING	01/24/2026	533.93		70-51-16 OPERATING SUPPLIES	02/28/2026
1487	Grizzly Grading & Excavation LLC	1005	OPERATING	01/24/2026	533.93		10-45-16 OPERATING SUPPLIES	02/28/2026
1487	Grizzly Grading & Excavation LLC	1006	SNOW REMOVAL	01/29/2026	1,957.59		10-45-42 SNOW REMOVAL	02/28/2026
	Total Grizzly Grading & Excavation LLC:				3,559.37			
Lasting Impressions								
98	Lasting Impressions	30096	OFFICE SUPPLIES	12/14/2025	12.00		10-41-15 OFFICE SUPPLIES	12/31/2025
	Total Lasting Impressions:				12.00			
Mesa County Public Health Regional Lab								
763	Mesa County Public Health Regio	17260	PROF SERV	02/04/2026	30.00		60-50-20 LEGAL, ENGINEERING & PR	02/28/2026
763	Mesa County Public Health Regio	17275	PROF SERV	02/04/2026	30.00		60-50-20 LEGAL, ENGINEERING & PR	02/28/2026
	Total Mesa County Public Health Regional Lab:				60.00			
Motorola Solutions								
1076	Motorola Solutions	8230553209	CONTRACT SERVICES	01/02/2026	6,878.11		10-42-42 CONTRACT SERVICES	02/28/2026
	Total Motorola Solutions:				6,878.11			

Vendor	Vendor Name	Invoice Number	Description	Invoice Date	Net Invoice Amount	Voided	GL Account and Title	GL Period Date
NAPA - Paonia Auto Parts								
122	NAPA - Paonia Auto Parts	JAN 2026 STA	VEHICLE	01/31/2026	58.06		10-41-23 VEHICLE EXPENSE	02/28/2026
122	NAPA - Paonia Auto Parts	JAN 2026 STA	VEHICLE	01/31/2026	794.69		10-42-23 VEHICLE EXPENSE	02/28/2026
122	NAPA - Paonia Auto Parts	JAN 2026 STA	SHOP	01/31/2026	33.87		10-45-25 SHOP EXPENSE	02/28/2026
122	NAPA - Paonia Auto Parts	JAN 2026 STA	SHOP	01/31/2026	33.87		10-46-25 SHOP EXPENSE	02/28/2026
122	NAPA - Paonia Auto Parts	JAN 2026 STA	SHOP	01/31/2026	33.87		60-50-25 SHOP EXPENSE	02/28/2026
122	NAPA - Paonia Auto Parts	JAN 2026 STA	VEHICLE	01/31/2026	5.57		60-50-23 VEHICLE EXPENSE	02/28/2026
122	NAPA - Paonia Auto Parts	JAN 2026 STA	SHOP	01/31/2026	33.87		70-51-25 SHOP EXPENSE	02/28/2026
122	NAPA - Paonia Auto Parts	JAN 2026 STA	VEHICLE	01/31/2026	5.57		70-51-23 VEHICLE EXPENSE	02/28/2026
122	NAPA - Paonia Auto Parts	JAN 2026 STA	SHOP	01/31/2026	33.87		80-52-25 SHOP EXPENSE	02/28/2026
122	NAPA - Paonia Auto Parts	JAN 2026 STA	VEHICLE	01/31/2026	60.04		80-52-23 VEHICLE EXPENSE	02/28/2026
	Total NAPA - Paonia Auto Parts:				1,093.28			
Nazarenus Stack & Wombacher LLC								
1456	Nazarenus Stack & Wombacher L	8383	PROFFESSIONAL SERVICES	02/02/2026	2,550.00		60-50-20 LEGAL, ENGINEERING & PR	02/28/2026
	Total Nazarenus Stack & Wombacher LLC:				2,550.00			
Norris, Mary								
991	Norris, Mary	NORRIS-02-20	WATER NORRIS RETIREMENT	02/02/2026	560.00		60-50-44 NORRIS RETIREMENT	02/28/2026
991	Norris, Mary	NORRIS-02-20	WASTE WATER NORRIS RETIR	02/02/2026	560.00		70-51-44 NORRIS RETIREMENT	02/28/2026
	Total Norris, Mary:				1,120.00			
North Fork Service (Reedy's)								
141	North Fork Service (Reedy's)	DEC 2026 PD	VEHICLE	12/31/2025	1,148.26		10-42-23 VEHICLE EXPENSE	12/31/2025
	Total North Fork Service (Reedy's):				1,148.26			
Phonz +								
499	Phonz +	19670	Admin IT Services Costs	02/02/2026	674.36		10-41-20 LEGAL, ENGINEERING & PR	02/28/2026
499	Phonz +	19670	PD IT Services Costs	02/02/2026	674.36		10-42-20 LEGAL, ENGINEERING & PR	02/28/2026
499	Phonz +	19670	WW IT Services Costs	02/02/2026	674.36		70-51-20 LEGAL, ENGINEERING & PR	02/28/2026
499	Phonz +	19670	Trash IT Services Costs	02/02/2026	674.36		80-52-20 LEGAL, ENGINEERING & PR	02/28/2026
499	Phonz +	19670	Water IT Services Costs	02/02/2026	674.37		60-50-20 LEGAL, ENGINEERING & PR	02/28/2026
	Total Phonz +:				3,371.81			

Vendor	Vendor Name	Invoice Number	Description	Invoice Date	Net Invoice Amount	Voided	GL Account and Title	GL Period Date
PROFESSIONAL MANAGEMENT SOLUTIONS								
1325	PROFESSIONAL MANAGEMENT	85182	PROF SERV	01/29/2026	300.00		10-41-20 LEGAL, ENGINEERING & PR	02/28/2026
1325	PROFESSIONAL MANAGEMENT	85182	PROF SERV	01/29/2026	300.00		10-42-20 LEGAL, ENGINEERING & PR	02/28/2026
1325	PROFESSIONAL MANAGEMENT	85182	PROF SERV	01/29/2026	600.00		60-50-20 LEGAL, ENGINEERING & PR	02/28/2026
1325	PROFESSIONAL MANAGEMENT	85182	PROF SERV	01/29/2026	600.00		70-51-20 LEGAL, ENGINEERING & PR	02/28/2026
1325	PROFESSIONAL MANAGEMENT	85182	PROF SERV	01/29/2026	600.00		80-52-20 LEGAL, ENGINEERING & PR	02/28/2026
	Total PROFESSIONAL MANAGEMENT SOLUTIONS:				2,400.00			
Region 10								
142	Region 10	AD2026PAO	DUES & SUBS	01/30/2026	746.29		10-41-31 DUES & SUBSCRIPTIONS	02/28/2026
142	Region 10	AD2026PAO	DUES & SUBS	01/30/2026	768.91		60-50-31 DUES & SUBSCRIPTIONS	02/28/2026
142	Region 10	AD2026PAO	DUES & SUBS	01/30/2026	746.29		70-51-31 DUES & SUBSCRIPTIONS	02/28/2026
	Total Region 10:				2,261.49			
Reich, Dennis								
624	Reich, Dennis	JAN 2026 BOO	OPERATING	01/21/2026	51.00		10-45-16 OPERATING SUPPLIES	02/28/2026
624	Reich, Dennis	JAN 2026 BOO	OPERATING	01/21/2026	49.50		70-51-16 OPERATING SUPPLIES	02/28/2026
624	Reich, Dennis	JAN 2026 BOO	OPERATING	01/21/2026	49.50		60-50-16 OPERATING SUPPLIES	02/28/2026
	Total Reich, Dennis:				150.00			
RESPEC Company LLC								
1124	RESPEC Company LLC	INV12251095	WESTERN LOOP	01/22/2026	3,628.75		60-50-73 CAP OUTLAY-West Loop Impr	02/28/2026
1124	RESPEC Company LLC	INV12251095	RAW WATER	01/22/2026	215.00		60-50-69 CAPTAL OUTLY-Raw Water M	02/28/2026
	Total RESPEC Company LLC:				3,843.75			
Salt Lake Wholesale Sports								
1285	Salt Lake Wholesale Sports	108557	OPERATING	01/29/2026	1,251.00		10-42-16 OPERATING SUPPLIES	02/28/2026
	Total Salt Lake Wholesale Sports:				1,251.00			
The Place I Go								
897	The Place I Go	TPIG 9959	PROF SERV	01/09/2026	45.00		10-42-20 LEGAL, ENGINEERING & PR	02/28/2026
	Total The Place I Go:				45.00			

Vendor	Vendor Name	Invoice Number	Description	Invoice Date	Net Invoice Amount	Voided	GL Account and Title	GL Period Date
T-MOBILE								
1374	T-MOBILE	JAN 2026 STA	TMobile Services Admin	02/01/2026	191.68		10-41-29 TELEPHONE & INTERNET	02/28/2026
1374	T-MOBILE	JAN 2026 STA	TMobile Services PD	02/01/2026	496.12		10-42-29 TELEPHONE & INTERNET	02/28/2026
1374	T-MOBILE	JAN 2026 STA	TMobile Services Streets	02/01/2026	56.38		10-45-29 TELEPHONE & INTERNET	02/28/2026
1374	T-MOBILE	JAN 2026 STA	TMobile Services Parks	02/01/2026	56.38		10-46-29 TELEPHONE & INTERNET	02/28/2026
1374	T-MOBILE	JAN 2026 STA	TMobile Services Water	02/01/2026	135.31		60-50-29 TELEPHONE & INTERNET	02/28/2026
1374	T-MOBILE	JAN 2026 STA	TMobile Services WasteWater	02/01/2026	56.38		70-51-29 TELEPHONE & INTERNET	02/28/2026
1374	T-MOBILE	JAN 2026 STA	TMobile Services Sanitation	02/01/2026	135.30		80-52-29 TELEPHONE & INTERNET	02/28/2026
	Total T-MOBILE:				1,127.55			
United Merchants Bank								
1371	United Merchants Bank	JAN 2026 STA	OFFICE SUPPLIES	02/01/2026	21.72		10-41-15 OFFICE SUPPLIES	02/28/2026
1371	United Merchants Bank	JAN 2026 STA	OPERATING	02/01/2026	69.37		10-41-16 OPERATING SUPPLIES	02/28/2026
1371	United Merchants Bank	JAN 2026 STA	POSTAGE	02/01/2026	88.77		10-41-17 POSTAGE	02/28/2026
1371	United Merchants Bank	JAN 2026 STA	TRAINING	02/01/2026	50.00		10-41-26 TRAVEL, MEETINGS & TRAI	02/28/2026
1371	United Merchants Bank	JAN 2026 STA	DUES & SUBS	02/01/2026	1,126.33		10-41-31 DUES & SUBSCRIPTIONS	02/28/2026
1371	United Merchants Bank	JAN 2026 STA	OPERATING	02/01/2026	62.40		10-42-16 OPERATING SUPPLIES	02/28/2026
1371	United Merchants Bank	JAN 2026 STA	POSTAGE	02/01/2026	93.30		10-42-17 POSTAGE	02/28/2026
1371	United Merchants Bank	JAN 2026 STA	UNIFORMS	02/01/2026	859.21		10-42-19 UNIFORMS	02/28/2026
1371	United Merchants Bank	JAN 2026 STA	OPERATING	02/01/2026	69.37		10-45-16 OPERATING SUPPLIES	02/28/2026
1371	United Merchants Bank	JAN 2026 STA	MAINT	02/01/2026	22.68		60-50-22 REPAIRS & MAINTENANCE	02/28/2026
1371	United Merchants Bank	JAN 2026 STA	TRAINING	02/01/2026	349.99		60-50-26 TRAVEL, MEETINGS & TRAI	02/28/2026
1371	United Merchants Bank	JAN 2026 STA	DUES & SUBS	02/01/2026	301.63		60-50-31 DUES & SUBSCRIPTIONS	02/28/2026
1371	United Merchants Bank	JAN 2026 STA	TRAINING	02/01/2026	50.00		70-51-26 TRAVEL, MEETINGS & TRAI	02/28/2026
1371	United Merchants Bank	JAN 2026 STA	DUES & SUBS	02/01/2026	301.62		70-51-31 DUES & SUBSCRIPTIONS	02/28/2026
1371	United Merchants Bank	JAN 2026 STA	VEHICLE	02/01/2026	2,174.29		80-52-23 VEHICLE EXPENSE	02/28/2026
1371	United Merchants Bank	JAN 2026 STA	TRAINING	02/01/2026	50.00		80-52-26 TRAVEL, MEETINGS & TRAI	02/28/2026
1371	United Merchants Bank	JAN 2026 STA	DUES & SUBS	02/01/2026	301.62		80-52-31 DUES & SUBSCRIPTIONS	02/28/2026
	Total United Merchants Bank:				5,992.30			
US BANK								
1343	US BANK	2026 1ST LOA	WATER LOAN PAYMENT	01/02/2026	214,073.36		60-50-50 Water Power Authority Loan	02/28/2026
	Total US BANK:				214,073.36			
UTILITY NOTIFICATION CENTER OF COLORADO								
1360	UTILITY NOTIFICATION CENTE	226011040	PROF SERV	01/31/2026	15.98		60-50-20 LEGAL, ENGINEERING & PR	02/28/2026
1360	UTILITY NOTIFICATION CENTE	226011040	PROF SERV	01/31/2026	15.98		70-51-20 LEGAL, ENGINEERING & PR	02/28/2026

Vendor	Vendor Name	Invoice Number	Description	Invoice Date	Net Invoice Amount	Voided	GL Account and Title	GL Period Date
	Total UTILITY NOTIFICATION CENTER OF COLORADO:				31.96			
Viaflex								
1466	Viaflex	60001720	WATER TANK RENTAL	01/27/2026	11,625.00		60-50-72 CAP OUTLAY-Water Tank Reli	02/28/2026
1466	Viaflex	60001727	WATER TANK	02/05/2026	11,625.00		60-50-72 CAP OUTLAY-Water Tank Reli	02/28/2026
	Total Viaflex:				23,250.00			
Whitewater Building Materials								
1488	Whitewater Building Materials	334091	CAPITAL OUTLAY	12/16/2025	2,021.25		80-52-70 CAPITAL OUTLAY	02/28/2026
	Total Whitewater Building Materials:				2,021.25			
	Grand Totals:				309,388.66			

$1,224.90 Payroll Reconciliation

$310,613.50

Board Meeting Date: _____

Town Administrator: _____

Finance Committee/Mayor: _____

Finance Committee/Trustee: _____

Trustees: _____

_____

_____

_____

_____

Date Reviewed: _____

Paonia Police Department

DEPARTMENT BRIEFING: SUMMARY OF PROGRESS

02/01/2026

- The department and local law enforcement agencies met with administrative members of the Delta County School District to discuss school safety. This annual meeting provides an opportunity for law enforcement and district officials to collaborate on school safety and introduce district staff to new resource officers.

- The department began rollout of the code enforcement program. Policies are being reviewed and process is being developed. Code enforcement will continue to be community driven. This program utilizes a POST certified officer to conduct code enforcement weekly in collaboration with the Administrator and Clerks office.

- Officer Heiniger successfully completed his *Police Training Officer Certification.* This certification allows Officer Heiniger to be integrated into the department's new officer training program as a field training officer. This will be valuable as the department looks to become fully staffed in the 1st quarter of 2026.

- The department is working to review all municipal court penalties to comply with a recent State Supreme Court ruling. Colorado Municipal League brief is attached for an explanation of changes.

Paonia Police Department

Law Incident Table, by Date and Time

Date Occurred: 01/01/26

Time	Nature	Address	Agency	Loctn	Dsp
00:00:03	Extra Patrol	3RD ST & GRAND AVE, Paonia, CO	PPD		
00:04:24	Traffic Stop	1ST ST & NIAGARA AVE, Paonia, CO	PPD	PPD	VW
00:42:03	Traffic Stop	SAMUEL WADE RD, Paonia, CO	PPD	PPD	CIT
10:24:07	LOST/FOUND PROP	200 BLK GRAND AVE, Paonia, CO	PPD	PPD	

Total Incidents for this Date: 4

Date Occurred: 01/02/26

Time	Nature	Address	Agency	Loctn	Dsp
07:15:48	VIN INSPECTION	GRAND AVE, Paonia, CO	PPD	PPD	
07:28:28	VIN INSPECTION	GRAND AVE, Paonia, CO	PPD		
12:51:13	Parking Problem	5TH ST & GRAND AVE, Paonia, CO	PPD	PPD	VW
14:19:02	CITIZEN ASSIST	MEADOWBROOK BLVD;, Paonia, CO	PPD	PPD	
14:47:50	VIN INSPECTION	GRAND AVE, Paonia, CO	PPD	PPD	

Total Incidents for this Date: 5

Date Occurred: 01/03/26

Time	Nature	Address	Agency	Loctn	Dsp
14:52:54	Juvenile Prob	4th ST, Paonia, CO	PPD	PPD	VW

Total Incidents for this Date: 1

Date Occurred: 01/04/26

Time	Nature	Address	Agency	Loctn	Dsp
20:43:08	MISSING PERSON	5TH ST, Paonia, CO	PPD	PPD	

Total Incidents for this Date: 1

Date Occurred: 01/05/26

Time	Nature	Address	Agency	Loctn	Dsp
07:24:35	Disturbance	CLARK AVE, Paonia, CO	PPD	PPD	
08:52:12	Medical/transfe	MEADOWBROOK CT, Paonia, CO	PPD	PPD	
10:25:01	Certified Vin	MAIN AVE, Paonia, CO	PPD	PPD	
13:54:35	CITIZEN ASSIST	GRAND AV, Paonia, CO	PPD	PPD	

Time	Nature	Address	Agency	Loctn	Dsp
14:03:53	VIN INSPECTION	GRAND AVE, Paonia, CO	PPD	PPD	
14:05:02	WELFARE CHECK	DELTA AVE, Paonia, CO	PPD	PPD	
14:05:52	CITIZEN ASSIST	GRAND AVE, Paonia, CO	PPD		
14:34:55	CITIZEN ASSIST	GRAND AVE, Paonia,	PPD	PPD	
15:37:57	SUSPICIOUS	3RD STREET, Paonia, CO	PPD	PPD	
16:34:53	Private Pro Acc	2ND ST Paonia, CO	PPD	PPD	
19:27:37	SUSPICIOUS	2ND ST, Paonia, CO	PPD	PPD	

Total Incidents for this Date: 11

Date Occurred: 01/06/26

Time	Nature	Address	Agency	Loctn	Dsp
08:55:44	LOST/FOUND PROP	GRAND AVE Paonia, CO	PPD	PPD	
18:06:24	Wanted Person	DELTA AVE, Paonia, CO	PPD	PPD	A

Total Incidents for this Date: 2

Date Occurred: 01/07/26

Time	Nature	Address	Agency	Loctn	Dsp
20:41:12	SUSPICIOUS	MEADOWBROOK BLVD, Paonia, CO	PPD	PPD	
22:56:41	Noise Complaint	CLARK AVE, Paonia, CO	PPD	PPD	VW

Total Incidents for this Date: 2

Date Occurred: 01/08/26

Time	Nature	Address	Agency	Loctn	Dsp
14:37:30	SUSPICIOUS	GRAND AVE, Paonia, CO	PPD	PPD	
17:05:12	AGENCY ASSIST	O RD, Paonia, CO	PPD	DCSO	AA
18:20:02	AGENCY ASSIST	HIGHWAY 133, Somerset, CO	PPD	GSO	AA

Total Incidents for this Date: 3

Date Occurred: 01/09/26

Time	Nature	Address	Agency	Loctn	Dsp
08:43:54	Information	3RD ST, Paonia, CO	PPD	PPD	
13:52:08	Information	2ND ST, Paonia, CO	PPD	PPD	
14:11:42	AGENCY ASSIST	GRAND AVE Paonia, CO	PPD	PPD	AA
16:25:08	HARASSMENT	ONARGA AVE, Paonia, CO	PPD	PPD	

Total Incidents for this Date: 4

Date Occurred: 01/14/26

Time	Nature	Address	Agency	Loctn	Dsp
12:39:23	Code Enforce	NORTH FORK AVE, Paonia, CO	PPD	PPD	
14:03:57	CITIZEN ASSIST	MEADOWBROOK BLVD, Paonia, CO	PPD	PPD	
20:45:10	TRESPASS	2ND ST, Paonia, CO	PPD	PPD	VW

Total Incidents for this Date: 3

Date Occurred: 01/15/26

Time	Nature	Address	Agency	Loctn	Dsp
08:31:43	AGENCY ASSIST	HIGHWAY 133, Paonia, CO	PPD	DIST3	AA
14:32:53	Traffic Stop	SAMUEL WADE RD & CLOCK RD, Paonia, CO	PPD	PPD	VW
16:53:56	Traffic Stop	RIO GRANDE AVE, Paonia, CO	PPD	PPD	CIT

Total Incidents for this Date: 3

Date Occurred: 01/19/26

Time	Nature	Address	Agency	Loctn	Dsp
18:25:06	WILDLIFE	HIGHWAY 133, Paonia, CO	PPD	DIST3	

Total Incidents for this Date: 1

Date Occurred: 01/20/26

Time	Nature	Address	Agency	Loctn	Dsp
12:57:59	LOST/FOUND PROP	GRAND AV, Paonia, CO	PPD	PPD	
14:46:03	Code Enforce	ONARGA AVE, Paonia, CO	PPD	PPD	
14:52:59	Code Enforce	RIO GRANDE AVE, Paonia, CO	PPD	PPD	
15:02:46	Code Enforce	RIO GRANDE AVE, Paonia, CO	PPD	PPD	

Total Incidents for this Date: 4

Date Occurred: 01/21/26

Time	Nature	Address	Agency	Loctn	Dsp
10:02:31	ANIMAL CONTROL	3RD ST, Paonia, CO	PPD	PPD	
14:43:36	VIN INSPECTION	GRAND AVE, Paonia, CO	PPD	PPD	
16:03:30	CIVIL PROBLEM	DELTA AVE, Paonia, CO	PPD	PPD	
22:14:14	CITIZEN ASSIST	3RD ST, Paonia, CO	PPD	PPD	

Total Incidents for this Date: 4

Date Occurred: 01/22/26

Time	Nature	Address	Agency	Loctn	Dsp
10:29:48	TrafficAccident	2ND ST, Paonia, CO	PPD	PPD	
17:13:06	AGENCY ASSIST	HIGHWAY 133, Hotchkiss, CO	PPD	DIST3	AA

Total Incidents for this Date: 2

Date Occurred: 01/23/26

Time	Nature	Address	Agency	Loctn	Dsp
15:29:43	AGENCY ASSIST	LAMBORN MESA RD, Paonia, CO	PPD	DIST3	AA

Total Incidents for this Date: 1

Date Occurred: 01/24/26

Time	Nature	Address	Agency	Loctn	Dsp
12:48:05	Information	MEADOWBROOK BLVD; Paonia, CO	PPD	PPD	
13:40:26	Property Damage	MAIN AVE, Paonia, CO	PPD	PPD	

Total Incidents for this Date: 2

Date Occurred: 01/25/26

Time	Nature	Address	Agency	Loctn	Dsp
08:54:56	Information	MEADOWBROOK BLVD, Paonia, CO	PPD	PPD	

Total Incidents for this Date: 1

Date Occurred: 01/26/26

Time	Nature	Address	Agency	Loctn	Dsp
15:29:38	VIN INSPECTION	GRAND AVE, Paonia, CO	PPD		

Total Incidents for this Date: 1

Date Occurred: 01/27/26

Time	Nature	Address	Agency	Loctn	Dsp
16:46:31	Code Enforce	ONARGA AVE, Paonia, CO	PPD	PPD	WW
16:54:00	Code Enforce	ONARGA AVE, Paonia, CO 326	PPD	PPD	WW
17:03:40	Information	DELTA AVE, Paonia, CO 237	PPD	PPD	
17:05:38	Code Enforce	ONARGA AVE, Paonia, CO 204	PPD	PPD	WW
17:39:40	Code Enforce	BOX ELDER AVE, Paonia, CO 316	PPD	PPD	WW
17:50:00	Code Enforce	BOX ELDER AVE, Paonia, CO 332	PPD	PPD	WW
18:14:29	Code Enforce	BOX ELDER AVE, Paonia, CO	PPD	PPD	WW

Total Incidents for this Date: 7

Date Occurr **ed:** 01/28/26

Time	Natur e	Address	Agency	Loctn	Dsp
07:32:31	CITIZEN ASSIST	BOX ELDER AVE, Paonia, CO	PPD	PPD	
15:14:42	Traffic Stop	SAMUEL WADE RD, Paonia, CO	PPD	PPD	

Total Incidents for this Date: 2

Date Occurr **ed:** 01/29/26

Time	Natur e	Address	Agency	Loctn	Dsp
13:09:11	Parking Problem	GRAND AVE, Paonia, CO	PPD	PPD	
14:59:06	VIN INSPECTION	GRAND AVE, Paonia, CO	PPD		
15:52:31	AGENCY ASSIST	RIO GRANDE AVE, Paonia, CO	PPD	PPD	AA

Total Incidents for this Date: 3

Date Occurr **ed:** 01/30/26

Time	Natur e	**Address**	Agency	Loctn	Dsp
11:25:52	VIN INSPECTION	DORRIS AVE, Paonia, CO	PPD	PPD	
14:52:00	Information	SAMUEL WADE RD, Paonia, CO	PPD		
21:01:46	LITTERING	ONARGA AVE, Paonia, CO	PPD	PPD	CIT

Total Incidents for this Date: 3

Total reported: 70

A-1, AA-5, CIT-3, VW-8, WW-6

A=AREEST
AA=AGENCY ASSIST
CIT= CITATION
VW=VERBAL WARNING
WW=WRITTEN WARNING

Report Includes:
All dates between `00:00:01 01/01/26` and `00:00:01 01/31/26`, All agencies matching `PPD`, All disposition's, All natures, All location codes, All cities

rplwlitr.x1

Legal Corner: Colorado Supreme Court limits municipal penalties for ordinance violations

January 20, 2026
By Robert Sheesley, CML general counsel

Municipal ordinances often mirror state crimes to allow cases to be heard locally in municipal courts. Municipal courts are part of Colorado's criminal justice system, but they exist to adjudicate cases arising under municipal ordinances. The cases they hear are expressions of the local governing body's responses to criminal activity and public safety needs in their communities. Municipal courts alleviate pressure on state courts and provide localized, efficient adjudication of minor offenses, which is more convenient for defendants, victims, and witnesses. In home rule municipalities, a court's jurisdiction and the definition of crimes and penalties are grounded in the home rule charter and Article XX of the Colorado Constitution.

Recently, however, the Colorado Supreme Court **ruled** that municipalities must limit penalties for municipal ordinance violations to the maximum set by state law for identical state crimes. In particular, ordinances must adhere to the reduced potential monetary and jail penalties for misdemeanors and petty offenses established by SB21-271.

What was SB21-271?

In 2021, the General Assembly enacted **SB21-271** (the Misdemeanor Reform Act) to reclassify and substantially reduce penalties for misdemeanors and petty offenses under state law. The act reduced the classifications of misdemeanors from three to two and created one classification of petty offenses as well as a new category of civil infractions. Under the changes

imposed by SB21-271, only class 1 misdemeanors are punishable by up to 364 days in jail or a fine of $1,000. State laws allowing municipal ordinance penalties of up to 364 days in jail or $2,650 in fines remained untouched.

There was no indication that municipal penalties would be affected by the bipartisan bill. Even the task force from which SB21-271 grew specifically acknowledged it was not addressing municipal offenses in its recommendations. The bill passed unanimously in the Senate but was disputed in the House of Representatives. Gov. Jared Polis signed the law.

In 2025, legislators recognized SB21-271's silence on municipal penalties and attempted to impose the prior bill's limits on municipalities. That effort, HB25-1147, had no bipartisan sponsorship and was opposed in both chambers, including by members who had voted for SB21-271. Gov. Polis vetoed the bill, **explaining**: "[T]he bill also significantly restricts a municipality's ability to react to local crime trends in ways that a local government deems most appropriate to improve public safety in their community. It is not in the interest of increasing public safety to constrain a municipality's ability to set appropriate sentences for crimes within their borders."

This legislative history strongly indicates that SB21-271 intentionally excluded municipal penalties and suggests that it would not have received bipartisan support — and might not have been signed by Gov. Polis — if it had. Municipalities certainly would have engaged in and been consulted in the enactment of the law.

Equal protection theories go bust

The Colorado Supreme Court agreed in 2024 to hear the claims of two municipal defendants in Aurora and Westminster. The defendants challenged their charges in municipal court as a denial of the equal protection guarantees of Article II, Section 25 of the Colorado Constitution. At least among crimes defined by state law, Colorado is in the minority of states with a rule that equal treatment requires the same potential punishments for the same proscribed conduct. If the conduct is indistinguishable, the potential punishment cannot be more excessive for one crime.

Under the defendants' theory, they were denied equal protection by being charged in municipal court under a municipal crime with a more severe penalty than if they had been charged in state court under state law for the same conduct.

At oral argument, the justices appeared disinterested in the defendants' equal protection theories. The resulting decision declined to address the equal protection theory. However, in its subsequent home rule analysis, the Court noted that "there is not an inherent need for statewide uniformity" in setting penalties for low-level crimes and did not consider equal protection guarantees as a component of its analysis.

As it stands, under Colorado jurisprudence, there has never been a holding that equal protection is implicated when a municipal ordinance and a state criminal statute involving the same conduct could result in different penalties.

Unintended preemption in *In re Camp* and *In re Simons*

The defendants found success in what may have been a supplemental theory that the Misdemeanor Reform Act preempted the municipal penalties of home rule municipalities. The Court reached the same outcome using a novel implementation of "operational conflict" preemption because "when municipal and state law prohibit identical conduct, a municipal penalty that exceeds the penalties permitted by the state 'necessarily authorizes what the state statute forbids.'"

First, the Court regarded the issue as a matter of mixed state and local concern. Under Article XX jurisprudence, courts weigh the interests of the state and municipalities by reviewing the totality of the circumstances to see whether the primary authority for regulation of an issue falls with the state, home rule municipalities, or both. Importantly, the Court classified the issue as one of establishing penalties for non-felony (or low-level) criminal offenses. Nominally following the analysis outlined in its prior cases, the Court discounted the constitutional enumeration of the power to establish penalties for ordinance violations in Article XX and aggrandized the concept of extraterritoriality (or the effect on persons who do not live in a municipality but choose to commit crimes within it). The Court swiftly concluded that both

state and municipal governments had an interest in regulating the penalties for such conduct, much as both had interests in regulating the conduct itself.

Then, given the finding of mixed concern, the Court proceeded to the preemption analysis and held that "the challenged municipal ordinances were preempted to the extent that they authorize harsher penalties than state law permits for identical conduct." The Court acknowledged that SB21-271 neither expressly nor impliedly preempted municipal penalties. That much is obvious, given the confinement of that law to state crimes and resounding omission of municipal crimes.

Instead, the Court relied on a concept of "operational conflict" preemption which is used when there is no indication of legislative intent. The theory had previously been used in cases involving significant and irreconcilable conflicts between local land use laws and oil and gas regulation or standards for advertising near federal-aid highways and local sex offender residency restrictions and the state's system for foster child placements. In such cases, "the effectuation of a local interest would materially impede or destroy the state interest." The Court previously has described a local ordinance authorizing what state law forbids or vice versa as necessarily satisfying this standard.

Here, the Court divined a state interest in "uniform and consistent penalties" from SB21-271's legislative history. The Court relied solely on a request from Gov. Polis in 2020 to the now-defunct Colorado Commission on Criminal and Juvenile Justice (CCJJ) to study sentence guidelines and a statement that the CCJJ drafted SB21-271 to promote "consistency and certainty in sentencing."

The Court ignored, however, **minutes of a CCJJ working group** highlighted in CML's *amicus curiae* brief that confirmed, "Municipal charges are not addressed in this recommendation." [Notably, Gov. Polis's 2025 veto reflected a desire that a successor to the CCJJ study the "far-reaching sentencing changes contemplated in HB25-1147" with all relevant stakeholders.] The Court's preemption analysis also did not account for a key distinction that mitigated against finding an equal protection violation: the establishment of crimes by separate legislative entities involving separate court systems.

Ultimately, the Court held that the state's interest was materially impeded without explaining the materiality of the impediment or how the separate

criminal justice systems were not reconcilable. Instead, the Court appeared to find materiality through the fact that criminal defendants could be subject to penalties in a municipal court that a state court was forbidden from imposing.

Looking forward after *Simons* and *Camp*

Municipal attorneys and courts are already advancing local changes to accommodate the ruling. Courts and prosecutors are modifying advisements and plea guidelines to conform to state law. City councils and town boards (home rule and statutory alike) will be presented with ordinances reducing penalties or conforming them to state limits. Other inconsistencies between municipal criminal ordinances and questions of the state's regulation of municipal court will be subjects for further investigation.

The full impact of these cases on Article XX and the powers of home rule municipalities is unclear and will be tested through future litigation. The use of "operational conflict" preemption came as a shock to municipal practitioners. It also may have surprised the legislators and governor who unwittingly enacted the preemption. The apparent elevation of the theory in the Court's eyes and the willingness of the Court to discern an overwhelming state interest and supply legislative intent where there was none is concerning.

It is entirely possible, however, that the Court's decision can be limited to the nature of the case. The judicial system is attentive to matters of criminal punishments, especially those involving jail time or significant fines. Although the Court did not rule on the equal protection theory, the Court's concern for uniform treatment for "identical conduct" suggests an interest in the outcome advocated for by the theory's proponents.

Moving forward, home rule municipalities should give appropriate weight to the potential for operational conflict preemption but should not fear that Article XX has been eviscerated. The Court's jurisprudence still suggests that operational conflict preemption does not apply simply because the state has regulated a matter of mixed concern (as it might in an implied preemption analysis). There must be a material impediment to a state interest, which should be identified by significant or longstanding state regulation.

This column is not intended and should not be taken as legal advice. Municipal officials are always encouraged to consult with their own attorneys.

Paonia Public Works Monthly Report

January 2026

Water

Badger meter cellular install - pilot

Stewart Ditch update - DMEA

2nd street water main break 1/16/26

Main St Water Break

Wastewater

Gate

Streets

Pedestrian crossing signs

Tree trimming

Parks

N/A

Trash

Delta Compost- Still waiting on dumpsters – Banner stand is being constructed

Other

CDOT Project management training – Nicki

CIRSA Road Maintenance Training – Crew

Shop rehab and organization

Confined Space Training w/ Mock 911 call

VIDEO

TOWN OF PAONIA
BOARD OF TRUSTEES MEETING
STAFF REPORT

AGENDA ITEM:	Adoption of Construction Standards
SUBMITTED BY:	N. Poulos
DATE:	2-10-26
BACKGROUND:	Public Works has previously submitted this construction standards document to the BoT. There was a requested change in language from a BoT member and was sent back to the Engineers for correction. During that time PW also found a definition that needed corrected and had that remedied as well. Attached document is the final draft to be adopted **Changes:** **PG 2: updates were made to the service lines definititions.** **Throughout the document: dates were updated to 2026**
BUDGET:	

RECOMMENDATION:	PW recommended the Town adopted the 2026 Construction Standards
ATTACHMENT:	Final Construction Standards document

214 Grand Avenue
Paonia, CO 80428
Phone: (970) 527-4101

Water and Wastewater System Standard Specifications

Adopted:

Revisions:

TABLE OF CONTENTS

SECTION 1.0 – GENERAL STANDARDS

Page

1.1 Purpose 1
1.2 Revisions, Amendments, or Additions 1
1.3 Effect of Specifications 1
1.4 Authority 1
1.5 Interpretation of Specifications 1
1.6 Definitions 1
1.7 Abbreviations 2
1.8 Reference Specifications 3
1.9 Requirements to Extend, Construct, or Modify System 3
1.9.1 Request for Development Information 3
1.9.2 Preliminary Review for Large Projects 3
1.9.3 Request for Recovery Contract 4
1.9.4 Plan Format, Submission, Review, and As-Builts 4
1.9.5 Preconstruction Meeting 6
1.10 Construction Matters 6
1.10.1 Conflicts Between Plans and Specifications 6
1.10.2 Construction Procedure 7
1.10.3 Surveying 7
1.10.4 Placing Survey Lines 7
1.10.5 Inspection 8
1.10.6 Abandonments, Material Recovery, and Reuse of Installed Materials 8
1.10.7 Warranty and Acceptance 9

SECTION 2.0 – WATER SYSTEM DESIGN STANDARDS

2.1 General 10
2.1.1 Deviation from Standard 10
2.1.2 Easements 10
2.1.3 Colorado Department of Health Regulations 10
2.2 Hydraulics 10
2.2.1 Sizing of Water Mains 10
2.2.2 Sizing of Services 10
2.3 Water Mains 11
2.3.1 Locations 11
2.3.2 Material 11
2.3.3 Corrosion Protection 11
2.3.4 Profile 11
2.3.5 Looping 11
2.4 Valves 11
2.4.1 Location 11
2.5 Appurtenances 12
2.5.1 Blow-off Valves 12
2.5.2 Air-Release Valves 12
2.5.3 Pressure-Reducing and Regulating Valves 12
2.5.4 Fire Hydrants 12
2.6 Separation from Pollution Sources 12
2.7 Casing 12
2.8 Fire Lines 13

2.9 Water Main Crossings 13
2.9.1 Asbestos Cement Water Main 13
2.9.2 Irrigation Ditch Crossings 13
2.9.3 Final Inspection 13

SECTION 3.0 – WATER SYSTEM INSTALLATION STANDARDS

3.1 General Construction 14
3.1.1 Start of Construction 14
3.1.2 Protection of Existing Underground Facilities 14
3.1.3 Detours – Traffic Control 14
3.2 Excavation 14
3.2.1 Safety 14
3.2.2 Construction Stakes 15
3.2.3 Trench Width 15
3.2.4 Over Excavation 15
3.2.5 Blasting 16
3.2.6 Sheeting and Bracing 16
3.3 Pipe Bedding and Laying 17
3.3.1 Select Bedding Material 18
3.3.2 Laying of Pipe 19
3.3.3 Length of Pipe 20
3.3.4 Fittings 20
3.3.5 Service Connections 20
3.4 Backfill and Compaction 20
3.5 Valve Installation 22
3.5.1 Valves 22
3.5.2 Valve Boxes 22
3.6 Fire Hydrant Installation 22
3.6.1 Installation 22
3.6.2 Anchorage 23
3.6.3 Drainage 23
3.6.4 Hydrant Protection in Corrosive Soils 23
3.7 Blow-off Installation 23
3.8 Air-Release Valve Installation 24
3.9 Pressure-Reducing Valve Installation 24
3.10 Disinfection 24
3.11 Hydrostatic Testing 24
3.11.1 General 24
3.11.2 Procedure 25
3.11.3 Allowable Leakage 25
3.12 Water Meter Installation 26
3.12.1 General 26
3.12.2 Residential Water Meter Installations 26
3.12.3 Water Meter Pit Installations (Other than Residential) 27
3.12.4 Combined Domestic and Fire Line Water Meters 27

SECTION 4.0 – WATER SYSTEM MATERIAL STANDARDS

4.1 Material Specifications – General 29
4.2 Pipe 29
4.2.1 Polyvinyl Chloride (PVC) Pipe 29
4.2.2 Ductile Iron Pipe 29
4.3 Fittings 29
4.4 Valves 29
4.4.1 12-inch Diameter and Smaller – Gate Valves 29
4.4.2 16-inch Diameter and Larger – Butterfly Valves 30
4.5 Fire Hydrants 31
4.5.1 General 31
4.5.2 Acceptable Brands 31
4.5.3 Size of Hydrant 31
4.5.4 Type of Hydrant 32
4.5.5 Inlet Connection 32
4.5.6 Main Valve Assembly 32
4.5.7 Operating Shaft Nut 32
4.5.8 Pumper Nozzle and Cap 33
4.5.9 Hose Nozzles and Caps 33
4.5.10 Color 33
4.5.11 Location 33
4.5.12 Hydrant Pressure and Temperature Monitoring Specifications 33
4.6 Pressure-Reducing Valves 35
4.7 Air-Release Valves 35
4.8 Thrust Blocks 35
4.9 Precast Concrete Vaults and Manholes 35
4.10 Services 35
4.10.1 General 35
4.10.2 Service Lines 36
4.10.3 Corporation Stops and Curb Stops (or Valves) 37
4.10.4 Meters 37
4.10.5 Backflow Preventers 38

SECTION 5.0 – WASTEWATER SYSTEM DESIGN STANDARDS

5.1 Quality of the Collection System 39
5.2 Sizing of Collection Mains 39
5.3 Layout of the Collection System 39
5.4 Manholes 40
5.4.1 Manhole Sizes 40
5.4.2 Changing Pipe Size 40
5.4.3 Intersections 40
5.4.4 Manhole Channels 41
5.4.5 Manhole Rings and Covers 41
5.4.6 Drop Manholes 41
5.5 Minimum Sewer Depth 44
5.6 Slopes 41
5.7 Construction Tolerances 42
5.8 High-Velocity Protection 42
5.9 Relation to Water Mains 42
5.10 Stub-outs from Manholes 43
5.11 Inverted Siphons 43
5.12 Stream and Drainage Channel Crossings 43

5.13 Crossings Under Railways and Highways 43
5.14 Aerial Crossings 43
5.15 Metering Vaults 43
5.16 Pumping Facilities 44
5.17 Force Mains 45
5.18 Underdrain System 45

SECTION 6.0 – WASTEWATER SYSTEM EXCAVATION & SITE STANDARDS

6.1 Earthwork Defined 46
6.2 Traffic Control 46
6.3 Caution in Excavation 46
6.4 Excavation to Line and Grade 46
6.5 Trenching and Excavation Operations 46
6.6 Blasting 47
6.7 Dewatering 48
6.8 Pipe Bedding 48
6.9 Select Bedding Material 49
6.10 Backfill and Compaction 50
6.11 Cleanup 50
6.12 Surface Restoration and Maintenance 51

SECTION 7.0 – WASTEWATER SYSTEM PIPE-LAYING STANDARDS

7.1 Handling of Materials 52
7.2 Inspection and Preparation of Pipe and Fittings 52
7.3 Cutting and Fitting of Pipe 52
7.3.1 Pipe Joint Lubrication 52
7.3.2 Pipe Alignment and Grade 52
7.3.3 Temporary Bulkheads 53
7.3.4 Frost 53
7.3.5 Lowering of Material into the Trench 53
7.4 Laying of Pipe 53
7.5 Ductile Iron Pipe 53
7.6 Polyvinyl Chloride Pipe 54
7.7 Manholes 55
7.8 Bridging and Encasement of Pipe 55
7.9 Encasement or Sleeve Pipe 56
7.10 Corrosion Protection Systems 56
7.11 Cleaning 57
7.12 Compaction Tests 57
7.13 Infiltration and Exfiltration Tests 57
7.14 Deflection Test 58
7.15 TV Inspection 58
7.16 Vacuum Testing for Concrete Sewer Manholes 59
7.17 Manhole Rim Elevations 60
7.18 Service Line Inspection 61

SECTION 8.0 – WASTEWATER SERVICE STANDARDS

8.1 Wastewater Taps 62
8.2 Excavations 62
8.3 Abandoning Existing Connections 62
8.4 Individual Service Pumps 62

8.5 Wastewater Service Line Ditches 62
8.6 Inline Wye 62
8.7 Installation Method 62
8.8 Slope 63
8.9 Alignment 63
8.10 Cleanouts 63
8.11 Connecting Clamps 63
8.12 Repair and Replacement of Existing Service Lines 63
8.12.1 Responsibility 63
8.12.2 Surface Restoration and Maintenance 63

SECTION 9.0 – WASTEWATER SYSTEM MATERIALS STANDARDS

9.1 Polyvinyl Chloride Pipe and HDPE Pipe – 4-inch Through 24-inch Diameter 65
9.2 Ductile Iron Pipe 65
9.3 Polyethylene Encasement Material 66
9.4 Concrete 66
9.5 Concrete Reinforcement 67
9.6 Precast Reinforced Concrete Manhole Sections 67
9.7 24-inch Diameter Manhole Ring and Cover 68

Appendices:

Appendix A – Request for Deviation Form
Appendix B – Town Signature Blocks
Appendix C – Town General Notes
Appendix D – Grease Interceptor Standards

Standard Drawings

Water

No.	Title
W-1	Fire Hydrant Locations
W-2	Fire Hydrant Installation
W-3	Fire Hydrant Specifications
W-4	Fire Hydrant Backflow and Meter Configuration
W-5	Valve Installation and Location
W-6	Valve Box Installation
W-7	Polyethylene Wrap
W-8	Bonding Joint & Anode Installation
W-9	Insulator Installation
W-10	Tracer Wire Installation Details
W-11	Thrust Block Data
W-12	Thrust Blocks Required for Taps
W-13	Restrained Pipe Length (ft) with Mechanical Joint Restraints
W-14	Typical Trench Cross Section
W-15	Typical Common Service Trench Section
W-16	Saved for Future Use
W-17	Pipe Cutting
W-18	Concrete Reverse Anchor for Mechanical Joint Restraints
W-19	Lowering Detail – Utility Crossing 30” & Smaller
W-20	Lowering Detail with Casing Utility Crossing Greater than 30”
W-21	Saved for Future Use
W-22	Temporary Blow-off Assemblies – 4”, 6”, and 8” Mains with Mechanical Joint Plug
W-23	Temporary and Permanent Blow-off Assemblies for Mains 12” and Greater
W-24	Blow-off Assembly Dimension Data for Mains 12” and Greater
W-25	Pipe Tapping Detail
W-26	Cul-de-Sac Blow-off Detail
W-27	Flange – Lug Detail
W-28	Applications for Mechanical Joint Restraints
W-29	Saved for Future Use
W-30	8” Size Pressure Regulator Station
W-31	6” Size Pressure Regulator Station
W-32	Standard Concrete Vault for Valve Installation (Precast)
W-33	Standard Concrete Vault for Valve Installation (Cast-in-Place)
W-34	Protecting Tie Rods
W-35	Tapping Detail – 3/4” Through 2”
W-36	Typical Installation for Service Line and Stop Box
W-37	Installation for Service Line with Sleeve Under a Utility
W-38	Saved for Future Use
W-39	Water Meter Loop for 3/4" Through 1” Meters
W-40	3/4” Through 1” Service Line/Meter Pit Installation
W-41	Irrigation Service 3/4” and 1” Meter Installation
W-42	Saved for Future Use
W-43	Utility Service Locations
W-44	Saved for Future Use
W-45	Air/Vac Pressure Valve Pit

Wastewater

No.	Title
WW-1	Typical Trench Cross Section
WW-2	Precast Manhole
WW-3	Outside Drop Manhole
WW-4	Residential Sewer Two-Way Cleanout
WW-5	Sanitary Sewer Service Connection
WW-6	Sanitary Sewer Service Connection to Existing Main Detail
WW-7	Typical Utility Locations
WW-8	Saved for Future Use
WW-9	Shallow Sanitary Sewer Line Protection/Encasement
WW-10	Pipe Cutting
WW-11	Polyethylene Pipe Wrap
WW-12	Bonding Joint & Anode Installation
WW-13	Maximum Pipeline Deflection Data
WW-14	Grease Interceptor
WW-15	Sand/Oil Interceptor
WW-16	Grease Separator = 250 lbs.
WW-17	Grease Separator = 500 lbs.
WW-18	Kor-N-Seal Boot Detail
WW-19	Utility Service Locations
WW-20	Easement & Separation Standards – Water/Sewer Mains
WW-21	High Velocity Protection for Incoming Slopes 7% or Greater
WW-22	Steel Carrier Pipe with Helical Piers
WW-23	Typical Creek Crossing
WW-24	Pipe Encasement Detail
WW-25	Wastewater Meter Vault
WW-26	Typical Steel Casing Installation

SECTION 1.0 – GENERAL STANDARDS

1.1 Purpose

These Town of Paonia Water and Wastewater System Standard Specifications (the "Specifications"), as they may be amended from time to time, are to provide guidance to Developers, Engineers, Contractors, Builders, and other interested parties with respect to the design and construction of Water and Wastewater System improvements within the Town 's Service Area. The current edition of these Specifications is available is available on the Town of Paonia website. These Specifications contain technical data for the design and installation of the Water and Wastewater Systems within the Town and its Service Area.

The purpose of these Specifications is to assure consistency in the design, as well as quality and uniformity in the installation of Water Mains, Wastewater Lines, and appurtenances within the Town and its Service Area.

1.2 Revisions, Amendments, or Additions

These Specifications may be revised, amended, or added to as deemed prudent, in the sole discretion of the Town. If a vendor or Engineer wishes to submit a product or method of installation not covered by these Specifications, he/she may do so by submitting it to the Town Administrator with the backup information required.

It is the goal of the Town to review and approve water system plans and materials in the light of community values. Value engineering that can be shown to benefit the Developer, the Town, ratepayers, and future users of the system will be considered.

1.3 Effect of Specifications

These Specifications including any revisions, amendments, or additions shall be binding and in effect immediately upon adoption by the Town Board of Trustees. All parties using this document are responsible for determining that they have the most recent changes by checking the Town's website. These Specifications are made a part of and incorporated into the Town's Municipal code.

1.4 Authority

These Specifications are implemented by the Town Administrator, Town Engineer, and Public Works Director under the authority of the Town 's Board of Trustees.

1.5 Interpretation of Specifications

These Specifications are composed of criteria for engineering design, Town procedures and policies, construction and material specifications, and standard drawings. The interpretation of any section or the contradiction between sections, when applicable, shall be made by the Town. Requests for interpretation shall be submitted in writing to the Town Administrator. The interpretation issued by the Town shall be binding and controlling in its application.

1.6 Definitions

The meaning of the terms used herein shall be as follows:

A. Conditional Acceptance – Shall occur upon recommendation by the Town Engineer and concurrence by the respective Public Works Director for conditional acceptance of the Water Mains and/or Wastewater Lines, and upon provision to the Town of all appropriate easements for the maintenance and operation of such facilities, payment of all fees and charges due

hereunder, submission of As-Built Drawings, statement of costs, completion of an appropriate bill of sale dated subsequent to the expiration of the 24-month warranty period, and compliance with any other applicable requirements contained herein, the Town shall conditionally accept the systems.

B. Collection Main – Shall mean an eight-inch (8") or smaller diameter pipe and appurtenances receiving wastewater being a part of the Wastewater System.

C. Consulting Engineer – Shall mean the Developer's authorized utility Design Engineer.

D. Contractor – Shall mean any person, firm, or corporation authorized by the Town to perform work and to furnish materials within the Town.

E. Developer – Shall mean any person, corporation, partnership, joint venture, local governmental entity, or other entity.

F. Distribution Main – Shall mean a eight-inch (8") or smaller diameter pipe and appurtenances receiving potable water and conveying it to individual Service Lines.

G. Extensions – Shall mean Town Wastewater and Water System extensions within the Service Area of the Town. Shall further be defined as "Town Mains."

H. Inspector – Shall mean an authorized representative of the Town and/or Town's Engineer at the site of work and the person(s) duly authorized by the Town to enforce these Specifications.

I. Interceptor Main – Shall mean a Wastewater Pipeline larger than eight-inch (8") and appurtenances receiving wastewater being a part of the Wastewater System. Interceptor Mains are not allowed to be tapped with individual services unless permission is granted by the Town.

J. Service Lines (Water) – Shall mean the pipe, line, or conduit from the Water Main to an individual house or other structure. For properties located within Town limits, the Town shall own and maintain the service line from the main to the meter pit. Customer shall be responsible for the service line after the meter pit. For properties located outside of Town limits, the Customer shall own and maintain the entire service line.

K. Service Line (Sewer) – Shall mean the Wastewater Line extending from the premises up to and including the connection to the public Wastewater Main. The Customer shall own and maintain the entire service line.

L. Town Engineer- Shall mean the Town Engineer or his/her authorized representative acting on behalf of the town.

M. Transmission Main – Shall mean a Water Pipeline larger than an eight-inch (8") diameter pipe and appurtenances receiving potable water and conveying it to Distribution Mains. Transmission Mains are not allowed to be tapped with individual services unless permission is granted by the Town.

N. Water Main or Main – Shall mean any water pipe, line, or portion thereof, owned, or to be transferred for ownership by the Town.

O. Water System – Shall mean all Mains, together with all appurtenances, materials, equipment, and property including services, taps, pump stations, meters, and valves for distributing potable water to individual consumers.

P. Wastewater System – Shall mean Mains, together with all appurtenances, materials, equipment, and property including manholes, services, taps, lift stations, for collecting wastewater from individual customers.

1.7 Abbreviations

A. ANSI – American National Standards Institute

B. ARV – Air-release vacuum breaker valve

C. ASTM – American Society for Testing and Materials

D. AWWA – American Water Works Association

E. DIP – Ductile iron pipe

F. GPM – Gallons per minute

G. PRV – Pressure-reducing and regulating valve

H. PSI – Pounds per square inch

I. PSIG – Pounds per square inch gauge

J. PVC – Polyvinyl chloride

1.8 Reference Specifications

These standard Specifications, listed below, shall be incorporated into these Specifications as it is bound herein. Should a conflict arise between these Specifications, a written request for clarification shall be made to the Town.

A. Colorado Department of Transportation Standard Specifications for Road and Bridge Construction, Colorado Department of Transportation, 2023.

B. Manual of Uniform Traffic Control Devices for Streets and Highways, U.S. Department of Transportation, Latest Edition and Revisions Thereto.

C. Delta County Roadway Design and Construction Standards, Delta County, Colorado, December 12, 2005.

D. ASTM, American Society for Testing & Materials, 1916 Race St., Philadelphia, PA 19103.

E. AWWA, American Water Works Association, 6666 West Quincy Ave., Denver, CO 80235.

F. ANSI, American National Standards Institute, 1899 L Street, NW, 11th Floor, Washington, DC 20036.

G. Site Application Process, The Code of Colorado Regulations 19CR6,6-96.

1.9 Requirements to Extend, Construct, or Modify System

1.9.1 Request for Development Information

A. Development information may be obtained at the office of the Town of Paonia, located at 214 Grand Avenue, between the hours of 8:00 a.m. and 4:30 p.m. on weekdays (holidays excluded), excluding lunch from 12:30 p.m. to 1:30 p.m. Verify current times on the website.

B. Questions concerning these Specifications may be directed to the Town via telephone, email or through a pre-arranged meeting, or by written request directed to the Town Administrator.

1.9.2 Preliminary Review for Large Projects

The Town shall establish, and may amend from time to time, procedures to be followed by applicants for extensions of Town Mains. These procedures shall include all requirements for paperwork, submittals, engineering design, construction, and acceptance.

Where a project is large in scale, a preliminary submittal shall be made by the applicant, including an overall or master plan showing the area to be developed and any other adjoining proposed developments by the Owner/Developer. Large or difficult areas may

require extensive study and analysis. The Town will return to the applicant its requirements for the following:

A. Points of connection to existing facilities

B. Off-site facilities required

C. General locations of Mains to be installed

D. Size of Mains required

1.9.3 Request for Recovery Contract

If, in the sole opinion of the Town, an increase in line size is necessary in order to provide an acceptable level of service to the Developer parcel or other customers within the Town, the Developer may be required to provide oversized pipelines and/or facilities. The cost for the "oversizing" of such pipelines and/or facilities shall be borne solely by the Developer. The basis for such costs shall be the difference in unit prices between the maximum line size which is the Developer's responsibility and the actual size to be constructed. The cost for the design and preparation of contract documents for these "oversized" pipelines shall be the sole responsibility of the Developer. If the Town determines that it will construct the facilities, the Developer shall submit payment for the cost. The Town will not issue a notice of award until such payment has been made. The Town may collect fees or charges in the sole discretion of the Board from other customers served by the "oversized" facilities and may, in the sole discretion of the Board, reimburse the Developer for all or a portion of the oversizing costs incurred by the Developer.

A request for recovery shall include the following:

A. Contract holder’s name and address

B. Proof of payment to contractors, engineer, attorney, construction director, etc.

C. Easements granted

D. Permits issued

E. Conditional acceptance

F. Bill of sale

G. Map of Service Area, and

H. Detailed cost summary

For a complete list of the required items and policy details, refer to the recovery agreement policy and the Town Rules and Regulations.

1.9.4 Plan Format, Submission, Review, and As-Builts

A. The Developer or the Consulting Engineer shall submit to the Town a PDF set of the design drawings for review. Construction of any portion of system improvements shall not begin until design drawings have been approved by the Town's Engineer. A set of approved drawings and a copy of these Specifications shall be available at the job site while system improvements are under construction. Subsequent to initial approval, any design changes shall also be submitted to the Town for review and approval.

   Where any easements are required other than those being platted, legal descriptions should be submitted to the Town Engineer for review. Legal descriptions shall also include a sketch outlining the boundaries. The Developer/Owner shall provide an

updated commitment for title insurance, prepared by a title company approved by the Town, in accordance with the Town Rules and Regulations.

B. Drawings shall be twenty-four inches by thirty-six inches (24” x 36") overall. North shall be to top or right of sheet. Scale shall be one inch equals fifty feet (1" = 50') horizontal, one inch equals five feet (1" = 5') vertical. The cover sheet shall show the location map and proposed system plan indicating street names, pipe sizes, valves, fire hydrants, manholes, and all appurtenances. System shall also indicate the development name, name and address of the Developer, and the Consulting Engineer with Colorado P.E. seal and an index of sheets. After approval by the Town, half-size reproductions may be used for general purposes or in the field.

Drawings must contain both plan and profile of all lines with the exception of water distribution lines (10” or less) where profiles are not necessary if the design includes street plans and grades. Drawings shall contain adequate design information to include all lowerings and adjacent facilities, (including but not limited to drainage facilities, grading, and other utility crossings). Drawings must include Town General Notes (included in the Appendix), Town signature blocks, manholes, crossings, and all appurtenances. A utility plan shall show the location of all services.

Other elements of drawings must include the following:

1. Proposed plat showing location and dimensions of dedicated streets, alleys, rights-of-way, and easements.
2. Lots and blocks.
3. All existing and proposed curb, gutter, and pedestrian ramps.
4. Sidewalk locations with respect to property lines.
5. All existing or proposed utilities which cross or may conflict with Town installations to include size, type, and horizontal and vertical location.
6. All existing or proposed obstructions such as vaults, catch basins, traffic islands, etc.
7. Drawings must be prepared from actual field surveys referenced to land corners or other survey control points and be of sufficient accuracy such that the facilities can be accurately staked for installation and can be readily located after installation for maintenance and operation. Plans shall reference the Delta County Local Coordinate System (DCLCS) for the horizontal coordinate system and the combined scale factor shall be recorded on the Plans. All elevations shall reference the NAVD `88 vertical coordinate system.
8. Sufficient adjacent area to give the relation of new facilities to existing facilities.
9. Proposed grading and drainage facility plans.
    i. PDF sets of drawings and any special project conditions shall be submitted to the Town for review. Normal review time will be four (4) weeks. Drawings are reviewed by both engineering and operations. One (1) marked set of the submittals will be returned to the applicant. If desired, a review conference may be scheduled. When revisions are required, PDF sets of revised drawings shall be resubmitted to the Town for subsequent review. When acceptable, the Town Engineer will approve drawings (said approval indicating conformity with the Specifications and the Town’s Rules and Regulations) and return one approved set of the submittal. After approval and signature, four (4) sets of fully signed documents must be provided to the Town. The Consulting Engineer shall also submit the design

electronically in AutoCAD (or an AutoCAD-convertible format) as well as in PDF form.

ii. Prior to any construction, the Contractor must schedule a preconstruction meeting with the Town's Public Works Director. The preconstruction meeting must occur a minimum of seventy-two (72) hours in advance of commencing work. See Section 1.9.5 herein regarding preconstruction meetings.

iii. Upon completion of construction and prior to acceptance, one (1) complete set of project as-builts in electronic format of the same, in AutoCAD and PDF, indicating all changes from original approval, shall be submitted to the Town. If no changes have been made during construction, the sheet shall so indicate. The as-built drawings must contain the Consulting Engineer's as-built approval signature.

iv. Unless construction commences within twelve (12) months from the date of plan approval, approval shall become null and void.

v. The Developer may apply for a 6 month extension, which must be approved and signed by the Town Administrator and Public Works Director within twelve (12) months of plan approval. The Developer may apply for a maximum of two extensions.

1.9.5 Preconstruction Meeting

Prior to beginning any work on the project, the Developer shall schedule a preconstruction meeting through the Public Works Director with at least seventy-two (72) hours' notice to the following:

A. The Public Works Supervisor;

B. The Contractor having on-site authority;

C. A representative of the Owner or Construction Manager;

D. The Consulting Design Engineer and Soils/Testing Engineer;

E. All existing utilities that will be involved in the project;

F. Delta County Department of Transportation, or the appropriate Town and/or State agency having right-of-way jurisdiction;

G. Town Engineer;

H. Town Inspector;

I. Any third-party easement holder (if applicable); and

J. Any other parties required by the Town Engineer

1.10 Construction Matters

1.10.1 Conflicts Between Plans and Specifications

When a conflict occurs between or within standards, specifications, and drawings, a final interpretation shall be made by the Town Engineer pursuant to these Specifications, subject to the following criteria:

A. Addenda and modifications to the drawings and specifications take precedence over the original documents.

B. Should there be a conflict within the Specifications or on the drawings, the Town Engineer shall decide which stipulation will provide the best installation and this decision shall be final.

C. In the drawings, calculated dimensions shall take precedence over scaled dimensions and noted material over graphic indication.

1.10.2 Construction Procedure

Following final approval of the plan(s), the applicant may proceed with construction. In addition to all construction requirements contained in other portions of these Specifications, the applicant and the Contractor shall observe the following:

A. The applicant shall secure and pay for all licenses and permits required for the system extension;

B. Materials needed to complete work shall be on hand so that the project may proceed without delay;

C. Adequate provisions for notification of customers who may suffer outages must be developed.

D. Outages shall be kept to a minimum; and,

E. Mains and Service Stubs shall be tested to the satisfaction of the Inspector.

F. The use of hydrant meter assemblies (provided by the Town of Paonia with a deposit from the Contractor) shall be installed per detail drawing contained herein.

1.10.3 Surveying

Line and grade for Mains and appurtenances shall be established by a professional Engineer or by a land surveyor licensed to practice in the State of Colorado. All work shall be done in a professional manner using the same degree of skill and knowledge customarily employed by other professionals performing the same or similar services in the State of Colorado. Correct alignment and grade-staked alignment and elevations by the Inspector do not relieve the Design Engineer in any manner from the responsibility for field errors. Sufficient lines must be staked to ensure continual work progress. Under no circumstances shall pipe be installed without line and grade stakes set by the Developer's Engineer or surveyor and approved by the Inspector.

When a Town Main is to be installed outside of the public street right-of-way, within an easement or right-of-way dedicated for utility Main installations, the limits of the easement or right-of-way shall be marked with permanent monuments placed by a licensed surveyor, and the pipeline route shall be marked with buried pipeline markers when required. The Owner/Developer shall be responsible to provide restoration and landscaping adequate to prevent erosion caused by surface runoff. Landscaping and restoration construction shall be designed in such a manner that minimum future maintenance will be required. A landscaping and restoration design plan shall be submitted with the plan for approval and will be subject to the same guarantee, as described in these Specifications.

1.10.4 Placing Survey Lines

Hubs and stakes shall be set on an offset line to mark the location of the centerline of the Main. Centerline hubs and stakes may be used in addition to the offset hubs and stakes; however, they may not be set in place of the offset hubs and stakes. Notations on field stakes shall match approved plan and profile sheets.

Survey points shall be set a maximum distance of twenty-five feet (25') apart. All appurtenances and manholes shall be staked for location and grade. Points of curvature, points of tangency of curves, and points on the curve shall be staked. Property corner stakes or monuments shall be placed prior to construction and shall include all changes in

direction and not exceed 100 feet between on-line stakes. This will include all permanent easements as well as interior property lines. All stakes shall be flagged to increase their visibility. Survey staking may be modified with the agreement of the Design Engineer, Contractor, and the Town.

1.10.5 Inspection

A. New installation, replacement, or relocation of existing facilities or any other work involving the Town System shall be inspected and approved by an Inspector.

B. After receipt of plans approved by the Town, the Contractor shall give at least forty-eight (48) business hours' notice to the Town's Inspector at (970) 527-4101 prior to beginning construction. No construction shall commence sooner than forty-eight (48) hours after receipt of approved plans, nor shall construction begin prior to arrival of a Town Inspector at the project site. **All overtime work conducted before or after regular business hours or on Town holidays shall be at the expense of the Contractor and coordinated with the Inspector forty-eight (48) hours in advance.**

C. All materials used shall be subject to the inspection and approval of the Inspector at all times. The Inspector has the right to perform any testing deemed necessary to ensure compliance of the materials with these Specifications. No materials shall be used before being inspected or approved by the Inspector. Failure or neglect on the part of the Inspector to condemn or reject inferior materials or work shall not be construed to imply their acceptance should their inferiority become evident at any time prior to completion of a twenty-four (24) month warranty period. Materials rejected by the Inspector shall be immediately removed from the project site.

1.10.6 Abandonments, Material Recovery, and Reuse of Installed Materials

A. Abandonment/Material Recovery

1. The Town owns all existing parts of the Water and Wastewater System and any removed pipe, equipment, and or other materials can be claimed as property of the Town.
2. If and when materials and/or equipment must be removed from the existing system, the Inspector will determine if the Town wishes to maintain ownership.
3. Generally, pipe materials are not maintained. However, valves, fittings, special equipment, manhole rings and covers will often be reclaimed by the Town. If and when so directed by the Inspector, such items removed shall be delivered to the Town shop at 401 2nd Street.
4. If the Inspector elects not to claim any removed items, they may become the property of the Contractor who must remove the items from the site.

B. Reuse of Installed Materials

1. Used sewer pipe and manholes may not be reinstalled and/or reused.
2. Water pipe that has been installed and used cannot generally be reused except in unusual circumstances and only by permission of the Inspector. If and when water pipe is allowed to be reused, the Inspector must review and approve each piece of pipe prior to reinstallation. Gaskets must be replaced with new gaskets.
3. If an Inspector approves the reuse of any fitting, hydrant, and/or valve, that unit must be examined and approved by the Inspector as well. Again, all gaskets must be replaced with new gaskets.

4. If an Inspector approves the reuse of any sewer ring and/or cover, that unit must be examined and approved by the Inspector as well. Any and all Ram-Nek or sealants must be removed and reapplied with new material.

1.10.7 Warranty and Acceptance

The Developer, or the Contractor on behalf of the Developer, shall warrant the constructed facilities for a period of twenty-four (24) months after conditional acceptance. Conditional Acceptance will be granted by the Town when the following conditions have been met by the Developer to the satisfaction of the Town:

A. The entire Water System improvement has been constructed, pressure tested, disinfected, flushed, and the required number of negative standard bacteriological water tests results have been received from the laboratory.

B. The entire Wastewater System improvement has been constructed, pressure tested, vacuum tested, jet cleaned, and TV'd. The Town can perform this work at an expense to the Contractor.

C. All necessary approvals of design on construction, contracts, and agreements have been fully executed and delivered to the Town. It should be noted that if lines are in future rights-of-ways which are not yet recorded, the Owner/Developer must grant an easement to the Town for operation and maintenance prior to either conditional acceptance or final acceptance, in accordance with the Town's Rules and Regulations. Platting can occur over said easements.

D. The project statement and certification of costs, and bill of sale, are submitted in tabular form listing pipe sizes, footage for different sizes, and appurtenances with quantity, and are presented to the Town.

E. Record drawings have been presented to the Town, in printed hard copy and AutoCAD and PDF files.

F. During the warranty period, the Developer, or Contractor on behalf of the Developer, shall repair or correct all deficiencies which become known in a timely manner when notified by the Town.

G. Final acceptance by the Town will be by letter at the end of the warranty period, provided deficiencies have been corrected or repaired in a manner satisfactory to the Town.

H. If a cost recovery or reimbursement agreement is applicable, it should be executed prior to final acceptance.

SECTION 2.0 – WATER SYSTEM DESIGN STANDARDS

2.1 General

2.1.1 Deviation from Standard

These design criteria shall be adhered to for all Water Main facilities to be installed within the Town insofar as practical. If any deviation from these criteria is desired, a request must be submitted to the Town in writing. See attached Deviation Request in Appendices.

The request will be evaluated and the decision of the Town shall be adhered to for the design of the project.

2.1.2 Easements

All public Water Mains and appurtenances not installed in public rights-of-way shall be installed in easements, in accordance with the Town's Rules and Regulations. The minimum width of an easement shall be twenty feet (20'). The Water Main shall not be closer than five feet (5') to the edge of the easement.

Depending on depth, size, and nature of water facilities, more easement width may be required.

Easements must be conveyed to the Town pursuant to the Town's form of easement.

2.1.3 Colorado Department of Health Regulations

It is not intended that any regulations promulgated by the Colorado Department of Health pertaining to public water systems be annulled by these design criteria. When the Department of Health regulations are more stringent, they shall take precedence.

2.2 Hydraulics

2.2.1 Sizing of Water Mains

All Water Mains shall be sized in accordance with the following:

A. Flow velocity shall not exceed five feet (5') per second on a peak demand day.

B. Flow velocity shall not exceed ten feet (10') per second on a peak demand day during fire flow conditions. Fire flow requirements shall be determined by the Fire Protection District and submitted to the Town in writing.

C. Minimum design pressure shall be forty (40) PSI. Maximum design pressure shall be one hundred and fifty (150) PSI for all flow and static conditions.

D. Minimum diameter of Water Mains is eight inches (8") wherever fire hydrants are connected. Smaller lines may be accepted only where no fire hydrants are located upon approval by the Town Engineer.

2.2.2 Sizing of Services

Service Lines, taps, and meters shall be sized in accordance with AWWA manual (M22), Sizing Water Service Lines and Meters. The standard size for a single-family residence is one-inch (1") polyethylene line with a 5/8-inch meter and meter setting. One-inch (1") HDPE is comparable to a 3/4-inch copper Service Line, although only CTS HDPE Blue Service Lines will be used. Tracer wire is required for HDPE service lines.

2.3 Water Mains

2.3.1 Locations

A. Water Mains shall generally be installed ten feet (10') east of center line in north-south streets, and ten feet (10') north of center line in east-west streets. The foregoing shall be adhered to insofar as practical on curved streets. Where curbed medians are proposed, the Water Main shall be under the pavement, no closer than five feet (5') to the edge of concrete curb and/or gutter.

B. Any request for deviation from the above shall be noted in the design request submittal to the Town Engineer, including where public Water Mains are proposed to be installed in easements.

C. Water Mains shall be designed for a minimum of five feet and six inches (5'-6") and a maximum of six feet and six inches (6'-6") of cover, except where another utility causes a conflict, in which case the Water Main shall be lowered as necessary. For water distribution lines, lowerings of two feet (2') or less shall be accomplished by deflection if possible. Lowerings in excess of two feet (2') shall require a formal lowering with fittings.

2.3.2 Material

All water piping shall be C900 DR18 (unless otherwise noted). Certain instances, such as higher operating pressures, may call for the use of other DR ratings or ductile iron pipe.

2.3.3 Corrosion Protection

Whenever metal pipe is proposed, the pipe shall be double bonded, poly wrapped, and cathodically protected. The drawing notes must include the required anode sizing and spacing. Where PVC pipe is used with Ductile Iron Fittings, those fittings must be individually wrapped and cathodically protected. See Wastewater Standards section 7.10 for further corrosion protection requirements.

2.3.4 Profile

All proposed Water Main drawings shall include a profile view which also shows the proposed finished surface above the Water Main, and elevations and stations of all fittings shall be noted. Elevation of the top of pipe shall be noted. Storm sewer shall be shown on all plans.

2.3.5 Looping

Dead-end Mains are discouraged. Looping shall be designed in the project proposed and a provision will be made for looping as the Mains are extended for adjacent projects. A maximum length of 100 feet is permitted on dead-end Mains where looping cannot be accomplished. A blow-off or hydrant will be required at the end of a dead-end main.

2.4 Valves

2.4.1 Location

A. Valves shall be placed at locations so as to least disrupt service should it be necessary to close a valve.

B. In general, five hundred feet (500') shall be the maximum spacing on Transmission and Distribution Mains. However, in distribution areas, valves should be clustered at intersections and block lengths should be taken into account. "Pup" sections from fittings to valves shall be 36 inches long, minimum. All crosses shall have four (4) valves and all tees three (3) valves.

C. A valve shall always be provided where a Main will be extended in the future to facilitate connecting to the existing Main without disrupting service. There shall be a minimum of five-foot (5') stub past the valve or at least five-feet (5’) beyond paved areas to facilitate ease of connection.

D. Additional valves may be required at major stream or roadway crossings to isolate the crossing.

E. Wherever a Water Main is installed in an easement, a valve may be required at each right-of-way line that intersects the Water Main.

2.5 Appurtenances

2.5.1 Blow-off Valves

Blow-off valves shall be required at all dead ends that do not have a fire hydrant at the end of the Main. Blow-off valves may also be required at low points along transmission Mains.

2.5.2 Air-Release Valves

Air-release valves in manholes shall be required at all high points along transmission and distribution Mains where services aren’t present.

2.5.3 Pressure-Reducing and Regulating Valves

Pressure-reducing and regulating valves in concrete vaults shall be required as necessary to control the pressure within the allowable range. Concrete vaults shall be sized as needed for maintenance and a by-pass line shall be required.

2.5.4 Fire Hydrants

The location of fire hydrants shall be as approved by the controlling fire protection agency. Fire authority signature is required on water plans. A fire hydrant may serve as a blow-off valve on a dead-end main if said main is 8 inches or greater.

2.6 Separation from Pollution Sources

In general, Water Mains shall be laid at least ten feet (10’) horizontally from any existing or proposed sources of pollution. The distance shall be measured edge to edge, in cases where it is not practical to maintain a 10 foot (10’) separation the Town may allow deviation on a case by case basis.

Water Mains crossing sanitary or storm sewers shall be laid to provide a minimum vertical distance of 18 inches (18”) between the outside of the Water Main and the outside of the sewer. Additionally, the Water Main shall be constructed in twenty-foot (20’) sections of pipe with no joints on the sewer pipe. The twenty-foot (20’) section shall be centered above the sewer pipe with ten feet (10’) to each joint. This shall be the case where the Water Main is either above or below the sewer with preference for the Water Main to be located above the sewer. When the minimum vertical separation cannot be achieved, a casing may be used upon written request to the Town Engineer for consideration.

The foregoing separation provision applies to fire hydrants as well as to Water Mains.

2.7 Casing

Where required by a railroad, highway authority or private utility, casing pipe for the Water Main shall be installed for the crossing as directed by the railroad, highway authority or private utility. Valves may be required near or on each side of the casing.

2.8 Fire Lines

Private fire lines and fire sprinkler system connections shall be provided with backflow preventers and check valves to preclude reverse flow into the distribution system, which could cause contamination of the system.

Fire lines and fire sprinkler systems containing antifreeze (propylene glycol) must be equipped with an approved reduced-pressure zone (RPZ) valve for cross-connection control (CCC).

2.9 Water Main Crossings

2.9.1 Asbestos Cement Water Main

In general, regarding any new excavation under an existing asbestos cement Water Main, the asbestos cement Main in question will be replaced with the same size, poly wrapped, class 52 DIP or PVC pipe coupled at each end with a Romac coupling or approved equal. The new replacement line will be installed from undisturbed bank to undisturbed bank and properly compacted. The same size valves will be installed on both ends, at the Town's discretion. The Contractor responsible for the excavation will supply all labor and materials and shall be responsible for the disposal of the asbestos cement pipe being replaced.

2.9.2 Irrigation Ditch Crossings

In general, any excavation through an existing irrigation ditch will require written permission from the ditch owner. Clay dams and/or other designs may be required to assure against leaking or "piping" within the ditch bank.

2.9.3 Final Inspection

The crossing will be given a final inspection by the Town before backfilling. Contractors will also give the Town a two (2) year written warranty for work performed in accordance with the Town's Rules and Regulations.

SECTION 3.0 – WATER SYSTEM INSTALLATION STANDARDS

3.1 General Construction

3.1.1 Start of Construction

Contractors shall not begin construction of public Mains without an approved plan and a preconstruction meeting. Construction of water services or extension shall not proceed without obtaining approval of the Public Works Director. Backfilling of water services shall not be initiated until the installation has been inspected and approved by the Town Inspector.

3.1.2 Protection of Existing Underground Facilities

It shall be the responsibility of the Contractor to verify the existence and location of all underground facilities along the route of work. The omission or the inclusion of facility locations on the plans is not to be considered as the nonexistence of or a definite location of existing underground facilities.

Whenever, in the opinion of the Town, it is necessary to explore and excavate to determine the location of underground utilities and structures which may interfere with construction, the Contractor shall make the exploration and excavations for such purpose.

The Contractor will take the necessary precautions to protect existing facilities from damage due to his operations. All damage to the facilities will be repaired at the Contractor's expense, and all claims for disruption will be settled by the Contractor at his expense.

3.1.3 Detours – Traffic Control

Traffic control, signing, detours, and utilization of existing streets require approval by the controlling right-of-way authority. Contractors and/or Developers must obtain adequate permitting and approvals from the controlling agency.

3.2 Excavation

3.2.1 Safety

The disturbed area due to construction shall be confined within the construction limits as required in the specifications or as shown on the plan. The length of trench to be opened at one time may be limited when, in the opinion of the Inspector, such limitation is necessary. The amount of open or unfilled trench shall not exceed three hundred linear feet (300’), unless otherwise approved by the Public Works Director. Failure to comply with this requirement shall be cause for shut down of the entire project until such backfilling is accomplished.

The sides of the trench shall be sloped or braced and the trench drained so that workmen can work safely and efficiently. All work must be done in a dry trench and no water will be permitted to discharge down the pipe previously laid. The discharge from groundwater pumps shall be laid to the approved natural drainage channel(s) or storm sewer and groundwater permitting must be acquired from CDPHE. All OSHA regulations pertaining to trenching must be followed.

In all cases where the Water Main alignment is located so that space and access is very limited with respect to the safety and welfare of adjoining buildings, such as property lines between houses, the Contractor shall discontinue open trench excavation and shall jack and/or auger a liner pipe in place for an adequate length to safeguard against settlement and damage to these adjacent structures. All jacking methods and materials must be approved by the Public Works

Director. Sheeting and bracing as later described may be approved by the Inspector as an alternative.

Pits of adequate size to accommodate necessary equipment shall be excavated, braced, and drained so that workers can work safely and efficiently.

3.2.2 Construction Stakes

All work shall be constructed in accordance with lines and grades shown on the approved drawings and as established by the Engineer. These lines and grades may be modified by the Consulting Engineer only after approval by the Public Works Director and/or Town Engineer. A change in alignment or grade will need a five (5) business day review period.

The Contractor shall give the Consulting Engineer sufficient notice of his need for the establishment of line and grade so that the Consulting Engineer may have time to provide the same. The Consulting Engineer shall set all vault and manhole rim stakes at the finished-street-grade elevation. After lines and grades for any part of the work have been given by the Consulting Engineer, the Contractor will be held responsible for the proper execution of the work to such lines and grades, and all stakes or other marks given shall be protected and preserved by him until he is authorized by the Inspector to remove them. The Contractor shall, at his own expense, correct any mistakes which may be caused by their unauthorized disturbance or removal. The Inspector may require that work be suspended at any time when, for any reason, such marks cannot be properly followed.

Line and grade stakes shall be set for each fitting and grade point shown on the drawings and at intervals necessary to maintain the pipe slope when so indicated on the drawings.

The method and equipment used to establish and check line and grade of the pipe shall be approved by the Inspector prior to the start of work.

3.2.3 Trench Width

The trench width at the top of the excavation may vary depending upon the depth of the trench and the nature of material encountered. However, the maximum allowable width of trench is defined in the attached detailed drawings.

For trench widths greater than specified above, the Contractor may propose alternate strength-of-pipe to depth-of-cover relationships other than those specified. Such proposals must be submitted to the Town Engineer for approval in writing and with pertinent pipe strength and soil weight data at least five (5) days prior to the desired construction date. The trench bottom shall be brought to grade to provide a uniform and continuous bearing, as well as support for the pipe on solid and undisturbed ground at every point between bell holes.

3.2.4 Over Excavation

Care must be taken to avoid over excavation. Should any over excavation exceeding two inches (2") be encountered, the material added shall be moistened and compacted to the satisfaction of the Inspector, or granular material placed with hand tools.

If, when dry, the bottom at subgrade is soft and, in the opinion of the Inspector, cannot support the pipe, a further depth shall be excavated as directed by the Inspector and refilled to pipe bedding grade as required under the above paragraphs, or other approved methods shall be adopted to ensure a firm foundation for the pipe. The class or type of material which is to be used for refilling up to pipe grade shall be foundation material consisting of squeegee or bedding material as defined herein. In the case of rock excavation, the excavation shall be carried to a minimum depth of six inches (6") below grade. This material will be removed and the trench backfilled with granular material to give a suitable subgrade.

All excavated material shall be piled within the construction limits or in a location obtained by the Contractor in a manner which will not endanger the work and will avoid obstructing sidewalks, driveways, and fire hydrants. Gutters shall be kept clear or other satisfactory provisions made for street drainage at all times.

3.2.5 Blasting

In general, blasting will be allowed in order to expedite the work if a permit by the local authority having jurisdiction is granted and a copy presented to the Town. All explosives and appurtenances shall be transported, handled, stored, and used in accordance with the laws of the local, state, and federal governments, as applicable.

The contractor shall comply with all laws, ordinances, applicable safe code requirements, and regulations relative to the handling, storage and use of explosives and protection of life and property. The Contractor shall be responsible for all damage caused by blasting operations. Suitable methods shall be employed to confine all materials lifted by blasting within the limits of the excavation or trench."

Owners or occupants of nearby structures or facilities, within a minimum distance of five hundred feet (500'), must be notified in writing by the Contractor at least seventy-two (72) hours in advance of blasting. The notice shall state the date, the time of blasting, and who is responsible for the blasting. The Town shall be notified a minimum of seventy-two (72) hours in advance of any blasting.

Blasting shall be controlled to avoid making any excavation unduly large or irregular, and so as not to shatter the rock on the bottom or sides of any excavation or surface upon or against which concrete is to be placed. If, in the opinion of the Town, blasting is liable to damage rock foundations or supports, concrete, other utilities, or structures, all blasting shall be terminated and excavation shall be continued by jack-hammering, barring, wedging, or other methods.

3.2.6 Sheeting and Bracing

The Contractor, to confine his work within the construction limits and to prevent the disturbing or settlement of adjacent road surfaces, foundations, structures, utility lines, or railroad tracks, shall furnish and place all sheeting and bracing necessary for safe conditions and to prevent damage and delay to the work. The Contractor shall be responsible for the strength and sufficiency of all sheeting and bracing.

Any damage to the work or to adjacent structures or property caused by settlement water or earth pressures, slides, cave-ins, or other reasons due to failure or lack of sheeting and bracing or improper bracing, or through negligence or fault of the Contractor in any manner shall be repaired by the Contractor at his expense without delay.

If, in the opinion of the Inspector, the sheeting and bracing at any point is deemed to be inadequate or improperly constructed, he may require additional sheeting and bracing be placed at the Contractor's expense. This shall not be construed to relieve the Contractor of sole responsibility of jobsite supervision.

Bracing shall be arranged so as to provide ample working space so as not to interfere with the work, and so as not place any strain on the structures being constructed, until such structures are, in the opinion of the Inspector, of sufficient strength to withstand such strain. No sheeting and bracing shall be removed until the construction has proceeded far enough to provide ample strength for its safe removal.

Sheeting or bracing may be left in place in the trench at the discretion of the Contractor. Any sheeting or bracing left in place shall lie approximately ten feet (10') from the surface and the cutoff portion removed, unless the Inspector gives permission to leave it in place.

3.3 Pipe Bedding and Laying

It is expected that the trench excavation will provide suitable bedding and backfill material. Wet, soft, or frozen material; asphalt and concrete chunks; cinder ashes, refuse, vegetable, or organic material; or boulders, rocks, or other deleterious substances shall not be used for bedding or backfill.

If the excavated material is not suitable for bedding or backfill as determined by the Inspector, suitable material shall be hauled in and utilized, and the rejected material hauled away and disposed.

<u>If native material is not suitable for bedding, six inches (6") of squeegee sand shall be placed on the trench bottom for support under the pipe and compacted</u>. Bell holes shall be dug deep enough to provide a minimum of two inches (2") of clearance between the bell and bedding material.

All pipe shall be installed in such a manner as to ensure full support of the pipe barrel over its entire length. After the pipe is adjusted for line and grade and the joint is made, the bedding material (squeegee sand) shall be carefully placed and tamped under the haunches of the pipe and in the previously-dug bell holes.

"Tamping" is herein defined as the act of placing approved bedding material under the haunches of pipe, paying particular attention to voids, bell holes, and sling holes. The purpose of tamping is to ensure uniform support for the pipe.

A. Pipes

Unless select bedding material is required, all pipelines shall be bedded by hand, from the bottom of the trench to the centerline of the pipe with sand, gravel, or other approved material placed in layers of three inches (3") and compacted. Bedding material shall be deposited in the trench for its full width on each side of the pipe, fittings, and appurtenances simultaneously.

The pipe shall be bedded by approved mechanical methods from the centerline of the pipe, fittings, and appurtenances to a depth of twelve inches (12") above the top of the pipe. Special care shall be used in placing this portion of bedding so as to avoid disturbing the pipe.

PVC pipe shall be installed in accordance with ASTM D2321 and the Manufacturer's recommendations, unless otherwise specified herein.

DIP pipe shall be installed in accordance with AWWA C600 and the Manufacturer's recommendations, unless otherwise specified herein.

The trench shall be backfilled by approved mechanical methods from twelve inches (12") above the pipe to the grade shown on the plans or specified herein.

All main lines (PVC and ductile iron) shall be installed with coated #12 tracer wire with test stations at intervals no greater than five hundred feet (500').

Valve boxes can be used at intersections and Service Stubs.

Install split-bolt housing to protect split-bolt wire nut and tracer wire in buried applications. Housing shall be made of high-impact polypropylene and be filled with a dielectric silicone gel.

- Max. Voltage: 50V
- Wire Range: #14-10 Steel Core Tracer Wire
- Split-bolt size not to exceed 1.0" tall by 0.8" wide by 0.7" deep
- Wrap all tracer wire split-bolt connectors or exposed wire using *linerless rubber splicing tape*, making sure to seal all ends to prevent moisture penetration.

B. Structures

Backfill and fill within three feet (3') adjacent to all structures and for full height of the walls shall be selected non-swelling material. It shall be relatively impervious, well graded, and free from stones larger than three inches (3"). Material may be job excavated, but selectivity will be required.

No backfilling will be allowed in freezing weather except by permission of the Town. No additional backfill will be allowed over any frozen material already in the trench.

3.3.1 Select Bedding Material

When indicated on the plans or drawings or when, in the opinion of the Inspector, select bedding material is required, preparation and installation shall be as follows:

A. *Installation of Bedding and Pipe*

After completion of the trench excavation and proper preparation of the foundation, six inches (6") of bedding material shall be placed on the trench bottom for support under the pipe and compacted. Bell holes shall be dug deep enough to provide a minimum of two inches (2") of clearance between the bell and bedding material.

All pipe shall be installed in such a manner as to ensure full support of the pipe barrel over its entire length. After the pipe is adjusted for line and grade, and the joint is made, the bedding material shall be carefully placed and tamped under the haunches of the pipe and in the previously-dug bell holes.

If approved by the Town, fines from the trench wall and soil pile may be used to provide uniform support for the pipe. No rock or stone larger than allowed by the sieve analysis, or any other detrimental substance, shall be placed closer to the pipe than six inches (6"). The Town reserves the right to require the use of select bedding material at any time.

For ductile iron and polyvinyl chloride pipe, the limits of bedding shall be from six inches (6") below the bottom of the pipe to twelve inches (12") above the top of the pipe.

B. *Bedding Material*

The bedding material shall be a clean squeegee sand, free of corrosive properties, and shall conform to the following gradation limits when tested by means of laboratory sieves:

Squeegee Sand

Sieve Size	Total Percent Passing by Weight
3/8 inch	100
No. 200	0 – 5

C. *Foundation Material*

Foundation material shall be uniformly graded, washed rock conforming to the following sieve analysis. A minimum of twelve inches (12") of foundation material shall be placed below the pipe to the trench bottom.

Foundation Material

Sieve Size	Total Percent Passing by Weight
2 inch	95 – 100

1/2 inch	10 – 30
#4	0 – 5

D. Flowable Fill

At the Town's option and on a case-by-case basis, utility trench backfill meeting the requirements in the table below may be used in lieu of native backfilling in any excavation regardless of width or depth. Concrete-slurry type, full-depth backfill will not be allowed within the public right-of-way. Compaction and testing of utility trench backfill will not be required if material meeting the following specification is used:

Flowable Fill

Ingredient	**lbs/cubic yard**
Cement	42 (0.47 sack)
Water	325 (43 gallons or as needed)
Coarse Aggregate (Size # 57)	1,700
Sand (ASTM C-33)	1,845

3.3.2 Laying of Pipe

Proper implements, tools, and facilities satisfactory to the Inspector shall be provided and used by the Contractor for the safe and convenient execution of the work.

Pipe materials shall be unloaded and distributed on the job in a manner approved by the Inspector. In no case shall materials be thrown or dumped from the truck.

Before lowering and while suspended, the pipe shall be inspected for defects to detect any cracks. Any defective, damaged, or unsound pipe shall be rejected and removed from the job site.

All foreign matter or dirt shall be removed from the inside of the pipe before it is lowered into its position in the trench, and it shall be kept clean by approved means, as determined by the Inspector, during and after laying. All openings along the line of Water Main shall be securely closed as directed, and in the suspension of work at any time, suitable plugs shall be placed to prevent earth or other substances from entering the pipe.

Pipes shall be laid to a true line and at uniform rates of grade between grade points as shown on the plans. Fine grading, to the bottom of the trench, shall proceed ahead of the pipe laying. Over excavation for a stable trench shall be six (6) inches with backfill consisting of pea gravel or select import bedding. Over excavation for a stable trench on long transmission lines shall be 12 inches with backfill consisting of pea gravel, select import bedding, or native soil if deemed acceptable by the geotechnical report. Caution tape shall be installed three (3) feet above pipe.

Bell holes shall be provided for the pipe bells. The pipe shall be supported along its bottom as required by these Specifications and throughout its length except for the minimum distance necessary at the bell holes. Bell holes shall be adequate to make the joint, but no larger than necessary so that maximum support will be provided for the pipe. The remainder of the pipe shall be surrounded as required by the appropriate bedding shovel placed and hand tamped, to fill completely all spaces under and adjacent to the pipe.

No pipe shall be laid in water or when trench conditions are unsuitable for such work.

When connecting to existing Water Mains, the Contractor shall take every precaution necessary to prevent dirt or debris from entering the existing lines. The Inspector may stop work if adequate protection is not being provided from groundwater, or other debris which might enter the pipeline.

When the design of a waterline indicates laying the pipeline on a radius, it may be accomplished in only one of two ways.

A. With smaller diameter PVC pipe, the line can actually be laid along a radius using the natural bending properties of the pipe, as long as the radius conforms to the Manufacturer's recommendations.

B. When laying DIP, the deflection in any bell/spigot cannot exceed the deflections allowed herein.

   MJ straight couplings may be used by the Contractor to lay a pipeline to a certain radius using the deflections allowed herein.

   Bend fittings should be used only where shown on the drawings or as approved by the Inspector.

   High deflection PVC couplings are not allowed.

3.3.3 Length of Pipe

The length of pipes for curvilinear Water Mains shall be determined by the radius using joint deflection not exceeding the Manufacturer's recommendations. See also "Laying of Pipe."

3.3.4 Fittings

Fittings shall be installed where shown on the plans. Pipes shall be cut as necessary to install fittings at the proper locations. Fittings shall be provided with restraint and/or thrust blocking as necessary per these Specifications. Fittings shall be supported by a minimum of six inches (6") of granular bedding (which can be native sand if deemed suitable) extending to the spring line of the pipe, and a minimum of eighteen inches (18") from the centerline of each fitting. Fittings may be supported by native sand, if suitable. Blocking is not permitted.

3.3.5 Service Connections

No Service Lines shall be installed until front property corners have been located. Service Lines for each property shall be a minimum of five feet (5') off of the property pin and on the opposite side of the driveway.

Length of Service Line from the Main to the house will be limited as follows:

1"	125'
1-1/2"	175'

Lengths greater than one hundred and seventy-five feet (175') need an Engineer's design for sizing. The design must be submitted in writing to the Town Engineer for approval.

All service connections to Mains shall be made in the top one-half (1/2) of the pipe. Tapping of Mains for service connections shall only be accomplished with the use of an approved tapping machine and tapping saddle; **Romac 202 BS Tap saddle, or approved equal.**

3.4 Backfill and Compaction

No backfilling will be allowed until the pipe installed conforms to the specified requirements.

Accepted on-site bedding or granular material shall be deposited in the trench simultaneously on both sides of the pipe for the full width of the trench to a height of six inches (6") above the crown of the

pipe. Accepted on-site bedding or granular material shall be shovel placed and hand tamped to fill completely all spaces under and adjacent to the pipe.

All backfill shall be compacted to a minimum of ninety-five percent (95%) of standard proctor density at optimum moisture, ASTM D-1557, by tamping or other means approved by the Inspector. If the controlling right-of-way authority requires a greater compaction requirement, the requirement of the controlling right-of-way authority shall control. Tests shall be conducted on compacted materials as directed by the Inspector and/or right-of-way authority. Jetting, puddling, or ponding will not be used except where approved by the Town. Sufficient cover over the pipeline will be hand tamped to prevent flotation of the pipe.

Backfill for Water Main trenches shall be suitable earth, free from rocks over three inches (3") in diameter, large roots, and excessive sod or other vegetation.

Backfilling and compacting shall be done as thoroughly as possible so as to prevent settlement. Depositing of the backfill shall be done so the impact of falling material will not injure the pipe or structures. Grading over and around all parts of the work shall be done as directed by the Inspector.

Backfilling shall be done in lifts of uniform layers not to exceed the depth shown in the compaction chart and each lift shall be completely compacted over the full width of the excavated area. Compacting shall continue until the specified relative compaction has been attained. Three feet (3') of material over the top of the pipe shall be required before a vibratory or sheepsfoot roller is operated over the pipe.

Compaction Chart

Compaction Type	**Maximum Loose Soil Lift Height (ft)**	
	Sands	**Plastic Soil**
Vibratory Roller (Vibro-Plus CK-10) or approved equal	4.0	Not allowed
Sheepsfoot (150 PSI Minimum)	Not allowed	2.0
Vibratory Sheepsfoot (Essick Vf-54T) or approved equal	4.0	2.0
Button Head Pneumatic	0.5	0.5
Plate Temper	1.0	1.0
Plate Vibrator	1.0	Not allowed

Succeeding layers of backfill may contain coarse materials but shall be free from large pieces of rock, frozen material, concrete, roots, stumps, tin cans, rubbish, and other similar articles whose presence in the backfill, in the opinion of the Inspector, would cause settlement of the trench or damage to the pipe. No stone larger than six inches (6") in diameter shall be placed within three feet (3') of the pipe.

Wherever select material exists in place in the upper four feet (4') of the finished grade of the paved or traveled portions of the street or roadway, is removed by the trench excavation, the Contractor shall replace said material (or material of equal quality) as backfill in the upper four feet (4’) of the

finished grade. Where select material does not exist in place as described above, the material available from other excavations on the project may be used.

Special compaction shall be done around all valve boxes and vaults, manholes, curb boxes, water services, other structures, and utilities by the use of pneumatic tampers, plate tampers, or plate vibrators with lifts not to exceed those shown in the compaction chart.

Water service trenches must be compacted in the same manner as Water Main trenches. All excavation in trenches shall be backfilled to the original ground surface or to such grades as specified or shown in the plans. Backfill shall begin as soon as practical after the pipe has been placed and shall thereafter be carried on as rapidly as the protection of the balance of the work shall permit.

Compaction tests at the expense of the Contractor shall be conducted by an independent testing laboratory to a depth not greater than two feet (2') above the pipe. One test shall be conducted for each run or every four hundred feet (400'), whichever is greater, or as required by the controlling authority. Copies of each compaction test report will be given to the Inspector and the Town prior to approval.

3.5 Valve Installation

3.5.1 Valves

Valves shall be handled in such a manner as to prevent any injury or damage. All joints shall be thoroughly cleaned before installation.

Valves shall be located at the points on the Mains as indicated on standard drawings, unless specified otherwise by the Town Engineer.

Valves shall be set and joined to the pipe in the same manner as laying and joining mechanical joint pipe.

Valves shall be set in such a manner that the valve stems are plumb. Valves shall be supported by a minimum of six inches (6”) of granular bedding (which can be native sand if deemed suitable) extending to the spring line of the pipe, and a minimum of eighteen inches (18”) from the centerline of each fitting. Valves may be supported by native sand, if suitable. Blocking is not permitted.

3.5.2 Valve Boxes

A valve box shall be provided for every valve. Valve boxes shall be 6850 heavy-duty valve box, slip-type, or approved equal. It shall not transmit shock or stress to the valve, and shall be centered and plumb over the operating nut of the valve, with the top of the box set to the required elevation. It will be the responsibility of the Developer or his Contractor to ensure that valve boxes are plumb and brought to the proper elevation. Tracer wire shall be ran along the outside of the valve box until the uppermost section where it will be run inside the valve box.

Paving of any street requires that all existing valve boxes be located and prepared for final raising to finish street surfaces as shown on the standard drawings. Prior to paving, a final inspection is required. Inspections should be requested twenty-four (24) hours in advance.

Mud plugs must be installed in all valve boxes.

3.6 Fire Hydrant Installation

3.6.1 Installation

All hydrants shall be staked for location and grade. Final location and grade shall be in accordance with the approved drawings. All hydrants shall stand plumb and be installed as indicated on standard drawing. Each hydrant shall be connected to the Main by a six-inch (6")

branch line. An independent six-inch (6") gate valve shall be installed on each fire hydrant branch. No Service Line connections shall be installed between the fire hydrant and the fire hydrant control valve. Tracer wire shall be extended from the Main to the lateral.

3.6.2 Anchorage

The bowl of each hydrant shall be well braced against the unexcavated earth at the end of the trench with a concrete thrust block. The bottom of the hydrant bowl and the hydrant valve shall be supported with an eighteen by eighteen by four-inch (18" by 18" by 4") precast concrete blocking slabs. Anchor tees shall be used on all new installations, and stainless steel tapping saddles with valves shall be used to install hydrants on existing installations.

Whenever a fire hydrant is installed at the termination point of a Main extension (such as in a cul-de-sac), tie rods and concrete reverse anchors will be required for both the fire hydrant valve (which in this case is also a line valve on the Main) and the fire hydrant lateral or branch line connected to the fire hydrant. See standard drawing. Additional concrete anchors may be required at the direction of the Inspector.

If bends are needed to bring a hydrant to a desired horizontal or vertical position, special concrete reverse anchors, anchor pipe, and/or all-thread tie-back rods (or a combination of all of these) along with a riser may be required. In any case, a riser may be required which is no longer than two feet (2').

It will be the Contractor's responsibility to set the safety flange at the proper grade.

The hydrant valve will be fitted with a "Mega Lug" or "One Bolt" fitting. Reverse anchors and all-thread will no longer be used, except in such cases as the Inspector deems necessary.

3.6.3 Drainage

Wherever a hydrant is set, drainage shall be provided at the base of the hydrant by placing rock from the bottom of the trench to at least twelve inches (12") above the barrel flange of the hydrant, and to a minimum distance of twelve inches (12”) around the elbow.

The minimum distance from the bottom of the trench to the bottom of the hydrant elbow shall be six inches (6"). The minimum amount of rock placed shall be one-third (1/3) of a cubic yard, and shall be a well-graded gravel cobble or crushed rock free of dirt. The rock shall be surrounded on all sides by a permeable Mirafi fabric to prevent the migration of soil into the drain rock area.

3.6.4 Hydrant Protection in Corrosive Soils

All ductile iron branch lines and hydrants shall be protected. All pipe, rods, and fittings, from finished ground level on the hydrant barrel up to and including the tee, shall be encased in poly wrap. The type of polyethylene and manner in which it is to be installed shall conform to these Specifications. Bedding material shall be as specified in these Specifications. All fire hydrants shall be cathodically protected with a 17-lb. anode.

3.7 Blow-off Installation

All dead ends on new Mains shall be closed with cast-iron plugs or caps. Such dead ends shall be equipped with suitable concrete anchors and blow-off facilities.

The Contractor shall furnish, install, or remove temporary blow-offs at locations shown on the drawings or designated by the Town. See standard drawing. The Contractor shall install permanent blow-offs where indicated on the drawings. A permanent blow-off is defined as one which will be left in place at the completion of all proposed installations. Refer to standard drawing.

3.8 Air-Release Valve Installation

Combination air-relief-vacuum breaker valves shall be installed at all high points on twelve-inch (12") and larger Water Mains. The valves shall be installed in forty-eight-inch (48") diameter concrete manholes with manhole rings and covers as shown in the standard drawings. The valves shall be tapped into the top of the Water Main with a one-inch (1") tap.

The pipe stem between the Water Main and the air-release valve shall contain a gate valve to isolate the air-release valve for maintenance purposes. Pipe and fittings shall be threaded galvanized iron, standard weight; gate valve shall be bronze and have hand wheel.

3.9 Pressure-Reducing Valve Installation

Pressure-reducing and regulating valves shall be installed where directed by the Town Engineer. The valve, piping, and appurtenances shall be installed in reinforced concrete vaults with access cover in the roof. The access cover shall be set to proposed final surface elevation and shall be adjusted for paving, if necessary. All piping shall be supported within the vault to permit removal of components for servicing.

3.10 Disinfection

Pipe extensions shall be chlorinated in accordance with AWWA Standard C651, "Disinfecting Water Mains", prior to being put into service. The chlorination of the finished pipeline shall be done prior to installation of any service taps. Before filling the pipe with water, the pipe shall be clean and free of debris to the satisfaction of the Inspector. Disinfection by chlorination of the pipe shall be performed prior to the Town's acceptance. The chlorinating agent and method of application shall be approved by the Town Engineer in accordance with AWWA Standard C651. The Contractor shall provide material for disinfection of Water Mains. Granular calcium hypochlorite must be used for disinfection.

After the calcium hypochlorite has been placed in the pipeline by the Contractor, disinfection must be completed within ten (10) calendar days. Should disinfection not be completed within this period, the Town will void this method of chlorination and require that the Main be disinfected by mobile gas chlorinator, or slug method, at the expense of the Contractor.

After the pipe is filled with water and chlorine at less than one foot/second (1 FPS), and unless approved otherwise by the Inspector, the chlorinated water shall be held in contact with the pipe for twenty-four (24) hours. At the end of the twenty-four (24) hour period, the water in the pipeline shall be tested by the Inspector to ensure a residual chlorine content of not less than fifty (50) mg/l. The pipeline shall then be thoroughly flushed to remove the heavily chlorinated water. Care shall be taken in flushing the pipeline to prevent property damage and danger to the public. Samples of water shall be collected for bacteriological examination and residual chlorine content testing before the pipe is put into service. Testing of bacteriological evaluation and sampling shall be performed by a Town employee.

A new Main will be released for the tapping of services when disinfection has been completed, bacteriological testing has been done, it is acceptable to the Public Works Director, and the Main has been flushed and charged.

3.11 Hydrostatic Testing

3.11.1 General

No hydrostatic tests shall be made on any portion of the pipeline until field-placed concrete has had adequate curing time.

The Inspector shall be notified twenty-four (24) hours in advance of testing. **All testing shall be made in the presence of the Inspector**.

Only the following methods are acceptable for supplying potable water for hydrostatic testing:

a. Water may be taken from a nearby pressurized water source which has been previously chlorinated, tested, and accepted, such as a fire hydrant.

b. Water may be delivered to the site in a chlorinated water tank having a minimum capacity of three hundred (300) gallons. The water tank shall be used exclusively for the transportation of potable water.

c. Any previously tested, chlorinated, and accepted Water Main which is pressurized and is to serve the new Main extension may be tapped on the pressurized side of the closed valve.

In any event, the method of supplying water as well as the source of water for hydrostatic testing shall be as approved by the Inspector. Use of barrels, sanitary or otherwise, to supply water for hydrostatic testing is strictly prohibited.

All Water Mains shall be hydrostatically tested in the field to a minimum pressure of two hundred (200) PSI **for no less than two (2) hours**.

3.11.2 Procedure

The pipeline shall be properly backfilled and shall be in a state of readiness for testing. All bulkheads, pumps, taps, and appurtenances necessary to fill the pipeline and maintain the required pressure shall be in place. The pipeline shall be filled with water and the test pressure shall be applied to the pipeline by means of a continuously-operating pump equipped with a bypass valve for regulating pressure. When filling the pipeline, it shall be filled at a rate which will not cause any surges, nor will it exceed the rate at which the air can be released.

All air in the line shall be properly purged. Fire hydrants are preferred for purging air in lines. Where blow-offs or hydrants are not available or are not effective in purging air from the line, the Inspector shall require a tap (at the Contractor's expense) to purge the line. The location and size of tap shall be at the Inspector's discretion.

Upon achieving test pressure, the pressurizing pump shall be turned off and disconnected from the pipeline.

While the test pressure is maintained, an examination shall be made of the pipeline in general, and any leaks shall be repaired. Any pipe or fitting found to be faulty shall be removed and replaced. No leakage is allowed through the bonnet of the line valve. Any valve leaking through the bonnet shall be repaired in place or removed and replaced. Cutting and replacing pavement, excavating, and backfilling may all be necessary parts of locating and repairing leaks discovered by pressure testing of pipe.

Tests shall be conducted with fire hydrant valves open and the hydrants shut off. After all visible leaks have been stopped, the full test pressure shall be maintained for two (2) continuous hours.

3.11.3 Allowable Leakage

At completion of the test, the pipeline shall be returned to exactly 200 PSI internal pressure and the amount of water metered into the pipeline. At the discretion of the Inspector, a leakage test is not required for water pipe sections less than twelve inches (12”) or less than 200 feet in length. The method of metering shall be a volumetric measurement taken from a tank no greater than fifty-five (55) gallons. Under no conditions shall an excess of five (5) PSI be lost during the two-hour test. Allowable leakage (that amount used to refill the pipeline) in gallons

per hour per one thousand feet (1,000') of pipe for each section between line valves for mechanical joint or push-on joint pipe shall not exceed the following rates:

Avg. Test Pressure	Pipe Size – inches (Gallons)						
PSI	**4**	**6**	**8**	**12**	**16**	**20**	**24**
250	0.47	0.71	0.95	1.42	1.90	2.37	2.85
225	0.45	0.68	0.90	1.35	1.80	2.25	2.70
200	0.43	0.64	0.85	1.28	1.70	2.12	2.55
175	0.40	0.59	0.80	1.19	1.59	1.98	2.38
150	0.37	0.55	0.74	1.10	1.47	1.84	2.21

If testing indicates a leakage rate in excess of the rates above, the pipeline will not be accepted. The pipeline shall be repaired, re-chlorinated, and retested as described in this section until all test requirements are met.

3.12 Water Meter Installation

3.12.1 General

A. The acceptable location for five-eighths-of-an-inch (5/8”) through one-inch (1") water meters shall be limited to outdoor meter pits for all residential applications. Commercial water meters may be located either inside of a building or outside of the building in a meter pit or vault. Locations for one-and-one-half inch (1-1/2") or larger water meters shall be approved by the Town prior to installation of the water meter.

B. Water meter locations selected shall provide adequate protection against freezing.

3.12.2 Residential Water Meter Installations

A. Residential water meter locations must be located outside and comply with detail W40. Meter pits and vaults should not be installed within any parking area or parking stall, driveway, or sidewalk area. The Town will evaluate meter pits/vault installed within these areas provided appropriate easements, access, and traffic loads are adequately accommodated on a case by case bases.

B. The only pit acceptable to the Town for five-eights-of-an-inch (5/8”) or three-quarters-of-an-inch (3/4") meters is a PVC pit, or approved equal, twenty-four inches (24") inside diameter by a minimum of thirty-six inches (36") in height, with a composite lid, frost-proof cover. See standard drawing and the accompanying notes. For one-inch (1") meters, the acceptable pits are the standard size, except twenty-four inches (24") in diameter, thirty-six inches (36") in height, with a frost-proof cover. See standard drawings and accompanying notes. Regulators or sprinkling system devices are not acceptable in either the twenty-inch (20") or the twenty-four-inch (24”) pit.

C. In no case shall water meter pits/vaults be installed in within a public street or road. Landscape and structures (e.g. trees and shrubs (upon maturity), boulders, retaining walls, drainage facilities, utility vaults, poles, etc.) shall not be within 5 feet of any outside edge of a meter pit or vault. Five-eights-of-an-inch (5/8”) thru one-inch (1") water meter loop installations shall include an inlet and outlet valve, as shown on standard drawings. Inlet and outlet valves shall be full port, handle-operated ball valves which shall be installed to close in the clockwise direction.

D. Plans for inside water meter loop (to include support) installations for one-and-one-half inch (1-1/2") and larger water meters shall be submitted to the Town for approval prior to

installation of the meter loop, and should be similar in design to the meter loop piping and support shown on standard drawings.

3.12.3 Water Meter Pit Installations (Other than Residential)

A. The location of the meter pit for three-quarters-of-an-inch (3/4”) and one-inch (1”) water meters will be located within an easement near the property line. If a problem arises on the location, the decision will be determined by the Town.

B. The only pit acceptable to the Town for three-quarters-of-an-inch (3/4") meters is a PVC pit, or approved equal, twenty-four inches (24") inside diameter by a minimum of thirty-six inches (36") in height, with a composite lid, frost-proof cover. See standard drawing and the accompanying notes. For one-inch (1") meters, the acceptable pits are the standard size, except twenty-four inches (24") in diameter, a minimum thirty-six inches (36") in height, with a frost-proof cover. See standard drawings and accompanying notes. Regulators or sprinkling system devices are not acceptable in either the twenty-inch (20") or the twenty-four-inch (24”) pit.

C. The meter loop in the pit (one-inch (1") water meters) must be with a copper setter with an inlet valve only; Ford Series V-82. The copper setter will be installed so that the loop is seventeen inches (17") below the top of the meter pit lid. See standard drawings and accompanying general notes.

D. The location of the meter pit for one-and-one-half inch (1-1/2") or larger water meters shall be approved in the field by the Inspector.

E. Meter pits for water meters one-and-one-half inch (1-1/2") or larger must be enough to accommodate meter, meter bypass, all valves, and piping. See standard drawings and accompanying general notes.

F. All pits housing a meter one-and-one-half inch (1-1/2") or larger will have a twelve-inch (12") wide metal ladder installed in the pit. Wooden ladders will not be accepted.

G. Meter pits must have an approved ring and cover of sufficient size (twenty-five-and-one-half inches (25-1/2") minimum) opening for installation and removal of the meter.

H. Meter loop (one-and-one-half inch (l-1/2") and two inches (2")) must sit on the floor of the pit, not on the riser. The maximum depth of the meter pit shall be five feet and six inches (5'-6"). The minimum depth of the pit shall be four feet and six inches (4'-6"). See standard drawings and accompanying general notes.

I. Water meter loops one-and-one-half inch (1-1/2”) and larger must have both inlet and outlet valves.

J. Plastic pipe between the Water Main and the curb stop shall be one-inch (1") Crestline CE Blue HDPE, SDR 9, two hundred (200) PSI with stainless steel stiffeners.

3.12.4 Combined Domestic and Fire Line Water Meters

A. Only meters approved by the National Board of Fire Underwriters shall be installed in water lines providing both domestic and fire demands. Requests to install a fire line and/or meter in a water line are handled in the same manner as a water line extension.

B. Unless otherwise approved by the Town, combined domestic and fire line meters must be installed in a pit large enough to accommodate the meter, meter bypass, and all valves and piping, all in accordance with standard drawings and accompanying general notes.

C. The location of the meter pit must be approved by the Town in advance of construction.

D. Meter pits must have an approved aluminum frame and aluminum locking lid of sufficient size (twenty-five-and-one-half inches (25-1/2") minimum) opening for installation and removal of the meter.

E. The meter loop (three inches (3") through six inches (6")) must sit on the floor of the pit, not on the riser. The maximum depth of the meter pit (inside dimension) shall be eight feet (8'). The minimum depth of the meter pit (inside dimension) shall be seven feet (7'). See standard drawing and accompanying general notes. For meter loops eight inches (8") through ten inches (10"), refer to standard drawing.

F. Water meter loops for combined domestic and fire line water meters must have both inlet and outlet valves.

G. Water meters must have a bypass around the meter of sufficient size to supply the property while the meter is being serviced. See standard drawings.

SECTION 4.0 – WATER SYSTEM MATERIAL STANDARDS

4.1 Material Specifications – General

All materials incorporated into the construction of the Water System shall be new and of first-class quality. Used, damaged, sunburned, or imperfect materials will not be permitted and shall be removed from the job site by the Contractor when so directed by the Public Works Director, Town Engineer, or Inspector.

The Contractor shall be responsible for storing material at the job site in a manner to prevent damage or contamination of the material. Security is the Contractor's responsibility. The Town is not responsible for loss of material from the job site.

4.2 Pipe

4.2.1 Polyvinyl Chloride (PVC) Pipe

A. All Water Mains shall be either C-900 PVC, DR18, DR14, ductile iron pipe, or HDPE 4710 DR-13.5, DR-11, through DR-9. Material for pipelines in excess of twenty-four inches (24”) in diameter must be approved by the Town Engineer.

B. Coated #12 tracer wire must be used.

4.2.2 Ductile Iron Pipe

A. DIP may be used for waterline through thirty inches (30”).

B. Shall meet requirements of AWWA Standard C151.

C. Pipe class shall be a minimum of Cl 350 for all sizes, unless otherwise specified on the approved drawings.

D. Joints shall be "push-on single gasket" type meeting requirements of AWWA Standard C111.

E. Cement-mortar lining shall be provided meeting the requirements of AWWA Standard C104.

F. If not delineated on the approved plans, all ductile iron pipe shall have cathodic protection using double No. 6 wire bonding with seventeen pound (17 lb.) anodes every four hundred feet (400') and nine pound (9 lb.) anodes on each fitting.

G. Pipe shall be poly wrapped with V-Bio Polyethylene Encasement or approved equal.

4.3 Fittings

Fittings for all pipe shall be cement-mortar-lined ductile meeting the requirements of AWWA Standards C104 and C110 and C153 for short body ductile iron and shall have nine pound (9 lb.) anodes on each fitting. **PVC fittings are not allowed**.

All fittings shall be restrained mechanical joint.

4.4 Valves

4.4.1 12-inch Diameter and Smaller – Gate Valves

A. Valves shall conform to the latest revision of AWWA Standard C509/C515 covering resilient seated gate valves for water supply service.

B. The sealing rubber shall be permanently bonded to the wedge per ASTM D429.

C. Valves shall be supplied with O-ring seals at all pressure-retaining joints. No flat gaskets shall be allowed.

D. The valves shall be non-rising stem (NRS) opening by turning left (counterclockwise) provided with a 2” square operating nut or handwheel with the word “open” and an arrow to indicate the direction to open.

E. Stems shall be cast copper alloy with integral collars in full compliance with AWWA. All stems shall operate with copper alloy stem nuts independent of wedge and of stem (in NRS valves).

F. Stems shall have two (2) O-rings located above the thrust collar and one O-ring below. Stem O-rings shall be replaceable with valve fully opened and subjected to full pressure. The stems shall also have two (2) low torque Delrin bearings located above and below the stem collar to reduce friction during operation.

G. Valves 4” and larger shall accept a full-size tapping cutter.

H. The body, bonnet and O-ring plate shall be fusion-bond epoxy coated, both interior and exterior on body and bonnet. Epoxy shall be applied in accordance with AWWA C550 and be NSF 61 Certified.

I. Each valve shall have Manufacturer’s name, pressure rating, and year in which it was manufactured cast in the body.

J. Valve bonnet to body retaining bolts will be hexagonal head and nut conforming to ANSI B18.2.1. Metric size and/or socket head cap screws or bolts will not be allowed.

K. Plastic disc or wedge guides will not be allowed.

L. Upper bolt holes on MJ connection valves 4”-12” shall incorporate closed elliptical design, no open slots.

M. 100% coated wedge with encapsulation of wedge completed by the Manufacturer.

N. End connections shall conform to AWWA Standard C111.

O. All valves shall be installed with a cast-iron valve box of the three (3) piece type to the finished grade. Tyler Slip-Type, six-inch (6") cast-iron valve box assembly series 6855, or approved equal.

P. Valves shall open counterclockwise (Open Left) on potable and raw water lines.

Q. If the dimension from final grade to the operating nut exceeds six (6) feet, a valve extension shall be installed.

4.4.2 16-inch Diameter and Larger – Butterfly Valves

A. All butterfly valves shall be of the rubber-seated, tight-closing type. They shall meet or exceed AWWA Standard C504, latest edition, Class 150 or Class 250. All valves shall be M&H 4500/1450 butterfly valves.

B. Both ends shall be AWWA C111 mechanical joint or per flanged ASME B16.1 (or as otherwise noted on plans and specs).

C. Valve shafts shall be ASTM A276 Type 304 stainless steel for Cl150 or ASTM A564 Type 630 stainless steel for Cl250. Each valve shaft shall be of a one-piece design for valves 12 inches and smaller and a two-piece design for valves 14 inches and larger. Valve shafts shall have a minimum diameter extending through the valve bearings and into the valve disc as specified in AWWA C504. All valve shafts must meet or exceed the minimum connection torque requirement set forth in AWWA C504.

D. Valve body and vane shall be high-strength Ductile Iron to ASTM A536 with ASTM A276 Type 316 stainless steel body seats.

E. Rubber valve seats shall be a full-circle, 360-degree seat not penetrated by the valve shaft. Valve seat shall be EPDM.

F. The valve seat will be attached to the valve vane by Type 304 stainless steel self-locking fasteners. The valve seat must be easily field adjustable and replaceable without any special tools or lengthy curing time.

G. Valve shaft seals shall be of the chevron-type for 3"–24" and O-ring type for 30 inches and larger utilizing the same elastomer as specified for the valve seats and the intended service. All valve shaft seals must be easily field replaceable.

H. Valve actuator shall be of the traveling nut type, sealed and lubricated for underground or in-plant service. Operator shall be capable of withstanding an overload input torque of 450 ft-lbs. at full-open or full closed position without damage to the valve operator. Operators for valves 14 inches and larger must have a 304 stainless steel external stop limiting device and travel adjustment. The travel adjustments must be able to be operated without removing the valve from the line. All valve actuators must be sized per AWWA C504. Certification of proof of design and torque requirements shall be submitted to the Owner upon request.

I. Hand crank, hand wheel or chain wheel – All manual operators for service other than underground shall have a position indicator and shall be totally enclosed and permanently lubricated. Actuators shall be designed to produce the required operating torque with a maximum rim pull of 80 lb. on hand wheel or chain wheel and a maximum input of 150 ft. lb. on operating nuts.

J. Cylinder – Cylinder operator shall be of the base mounted configuration. Cylinder barrel shall be of molybdenum disulfide-lined glass fiber reinforced epoxy tubing, to provide a corrosion-free, self-lubricated high-strength barrel. Rod seal shall be of urethane, molybdenum disulfide filled to provide a self-lubricated, long life seal.

K. The valve interior and exterior surfaces shall be coated in accordance with the latest revisions of AWWA C504 and must be NSF 61 Certified.

4.5 Fire Hydrants

4.5.1 General

All fire hydrants shall be designed and manufactured in strict compliance with AWWA Standard C502 (latest edition) for *Dry Barrel Fire Hydrants*. All references made in this specification are to the above standard unless otherwise noted.

Fire hydrants shall be UL listed and FM approved.

Fire hydrants shall be tested in accordance with AWWA C – 502 and UL/FM requirements.

Fire hydrants shall be manufactured (cast, machined, assembled and tested) in the United States and in full compliance of the American Iron and Steel requirement.

4.5.2 Acceptable Brands

Kennedy Guardian (K81D, K81A and K81AM), AVK, or approved equal.

4.5.3 Size of Hydrant

Hydrants shall have a Main valve opening size of five-and-one-quarter inches (4-1/2") and shall have a five-and-one-half-foot (5-1/2’) bury depth unless otherwise approved by the Town Engineer.

4.5.4 Type of Hydrant

All hydrants shall be the traffic model type. Hydrants shall be the three-way type with one (1) pumper nozzle and two (2) hose nozzles, all located on the same horizontal plane.

Fire hydrants shall be of the traffic model breakaway type, designed with the breaking rings mounted on the top of the lower barrel flange for ease of inspection and replacement and to include two (2) breaking ring straps for alignment.

Breakable stem coupling shall be designed to break cleanly, leaving the lower portion of the coupling in place to accept a short disassembly wrench. Pins for the coupling shall be stainless steel and of the one-piece spring-loaded design with no need for clevis pins, nuts or other retainers for ease of maintenance.

Fire hydrants must be compatible with existing pressure and temperature monitoring system.

4.5.5 Inlet Connection

Hydrant base shall be provided with a mechanical joint inlet to accommodate six-inch (6") diameter pipe, all in accordance with AWWA Standards. Incorporated into the base shall be two (2) lugs for rodding or strapping of pipe. Fire hydrant laterals shall be of the same material as the Main line.

4.5.6 Main Valve Assembly

Main valve of the hydrant shall be four-and-one-half-inch (4-1/2") diameter compression type which closes with water pressure.

Main valve shall be synthetic rubber reinforced with a steel insert and retained on the lower stem by a bottom plate utilizing a nylon lock design to eliminate the need for a lock washer.

The valve assembly shall include one (1) or more drain valves which work automatically with the Main valve and drain the barrel when the Main valve is in the closed position.

O-ring seal shall be provided between upper and lower barrels and provide full 360° adjustment of upper barrel and O-ring grooves shall be of a dove-tail design.

Fire hydrant shoe shall have two (2) bronze lined external drain holes located below the elbow nuts and bolts.

The seat shall be a bronze ring threaded to a bronze insert in the hydrant shoe, with O-ring seals.

Pressure activated drain valve assembly shall be aluminum bronze with a single drain valve facing which is retained by a pin for ease of replacement and automatically compensates for wear due to use.

All parts of the Main valve assembly shall be so designed that removal of the assembly from the barrel is accomplished without excavation.

4.5.7 Operating Shaft Nut

Operating nut shall be of a one-piece bronze construction, with a top loading method of introducing grease to the hydrant by way of a recessed zerk or grease fitting in the top of the operating nut. The operating nut shall have two (2) channels through the threads to provide lubrication between the threads of the stem and the operating nut. There shall be two (2) ports on the upper portion to provide lubrication for the thrust washer.

A thrust washer shall be supplied between the operating nut and the stem lock nut to facilitate operation.

The hydrant shall open by turning the operating nut to the left direction and shall have an arrow on top of the bonnet to designate the direction of opening.

4.5.8 Pumper Nozzle and Cap

The pumper nozzle shall be four-and-one-half-inch (4-1/2") nominal diameter with six (6) threads per inch. Threads shall be right hand. See standard drawing.

Nozzle caps shall be furnished with security chains with one end of each securely attached to the upper barrel section of the hydrant.

Hydrant cap/bonnet shall be of a one-piece design creating a water tight cavity without the use of gaskets.

A dirt shield shall be provided to protect the operating mechanism from dirt and moisture buildup.

Nozzles shall be of the tamper resistant type, insertion with O-ring seals and stainless steel retaining screws (clockwise 1/4-turn for removal).

4.5.9 Hose Nozzles and Caps

The two (2) hose nozzles shall be two-and-one-half-inch (2-1/2") nominal diameter with seven-and-one-half (7-1/2) threads per inch. Threads shall be right hand. See standard drawing.

Each hose nozzle shall include a nozzle cap with nut and security chain, and shall be removed by turning counterclockwise as described in Sections 4.5.7 and 4.5.8 above.

4.5.10 Color

Top of hydrant is color coded to a standard flow chart, per a flow test. The upper exposed section of the hydrant above ground shall be painted Rustoleum red (hexadecimal color code: #633a34) or approved equal. The buried portion of the hydrant shall be given a bituminous coating in accordance with Section 10-8.1 of AWWA Standard CI 10.

4.5.11 Location

Where possible, fire hydrants shall be located in the northeast quadrant of the intersection. See standard drawing for typical installation. The location of all fire hydrants shall have the written approval of the appropriate Fire Protection District.

4.5.12 Hydrant Pressure and Temperature Monitoring Specifications

Pressure and monitoring system shall be installed on at least one hydrant for each pressure zone, every 150 homes, 2,500 ft. of Water Main, or every twenty (20) hydrants - whichever comes first.

Device must include the following:

- Must have water resistant and hardwired information access point internally within the fire hydrant.
- Fire Hydrant must be completely, and fully operational once unit is installed and not require the need to shut water supply off, make modifications and then recharge to obtain normal operation.
- Dry Barrel Hydrant Version - Must receive electronic reading through the Main valve assembly utilizing a waterproof conduit (Poly Tubing) and compression fittings from which the wiring is run from sensors to the motherboard, battery and cellular antenna just beneath the hydrant bonnet which is above ground approximately 2’6” above grade.

- Must utilize an OEM spool piece to accomplish OEM installation requirements and maintain the robust integrity of the hydrant as required to meet UL and ULFM approval.
- Device and all components must meet UL and ULFM requirements and have proper documentation to prove such.
- Must be able to accept multiple layers of paint and maintain the OEM level of communication success.
- All power must be supplied to the motherboard from within the same housing as the motherboard via a Lithium-Ion battery utilizing an integrated Male x Female wire harness.
- Battery must have a minimum 5-year battery life when used with the factory default settings/parameters.
- Battery must be field replaceable utilizing the same connection as OEM without requiring any modifications.
- Must not require power supply below grade.
- Must not require WiFi or Bluetooth for communication or operation.
- Must have communication capability to allow for remote firmware upgrades and data uploads using cellular technology.
- Must have functionality across all platforms, desktop, laptop, tablet, mobile device or smart phone.
- Must have hosted software, which is user friendly and allows end user/client to migrate files directly from host to their water management software via CSV or Flat File to use with SCADA or similar utility infrastructure management software.
- Must be able to recognize and alert end user client via email or text utilizing cellular signal of thresholds (events) within the clients set parameters within one (1) minute. Time is based on adequate cellular reception.
- Must have minimum capabilities of reading every 5-seconds, 15-min averages and 12-hour uploads.
- Other capabilities: alarm threshold violation reads of 40 reads per second for 30 seconds for three (3) consecutive cycles before returning to its normal read cycle of 5 seconds, 15-minute averages, and 12-hour uploads.
- Must have the capability for future expansion within the device housing (2 shell components once assembled on hydrant) for future additional technologies currently in R&D for release.
- Must not interfere or utilize the nozzles or ports in any way.
- Must be available in both OEM preinstalled NEW hydrants and as retrofit kits utilizing ONLY OEM components for the hydrants listed herein.
- Must allow for normal operation of hydrant in hot or cold climate without flow restrictions or any other byproduct that would prohibit full operation. Hydrant must be fully functional in below freezing conditions.
- Must have water contacting the sensors under pressure while being utilized at the same time for fire or other utility applications.
- Manufacturer must have been in business for over 5-years, and manufacturing and marketing hydrant device for a minimum of 3-years.

4.6 Pressure-Reducing Valves

Pressure-reducing and regulating valves shall be of a type capable of maintaining pre-adjusted downstream pressures, varying rates of flow, and upstream pressure without causing water hammer or cavitation. Valves shall be installed in concrete valve vaults of sufficient size so as to provide adequate maintenance and operation. Valves shall have gate valves and pressure gauges on both upstream and downstream sides and shall have bypasses with smaller pressure-reducing and regulating valves to handle minimum flows as determined by the Town Engineer. Cla-Val 90-01BYKC or approved equal are acceptable.

4.7 Air-Release Valves

Valves shall be combination air-release and vacuum valves. These shall be installed at each high point on all eight-inch (8”) and larger Water Mains and at all other locations as directed by the Town Engineer.

Air-release and vacuum breaker valves shall be located in precast concrete manholes in accordance with the standard drawings, and shall automatically release air from the lines when the lines are being filled with water, and shall admit air into the lines when water is being withdrawn in excess of the inflow.

Valves shall be American made and have an iron body with bronze trim. Floats shall be stainless steel. One and a half-inch (1.5") to two-inch (2”) valves shall be installed. Oil the stem between the pipe and release valve, or as shown in the standard drawing.

Pipe and fittings used in the release valve system shall be galvanized steel, standard weight, and connections shall be threaded. Gate valves shall be bronze, threaded, and shall have hand wheels.

Acceptable manufacturers are Apco, Crispin, and Clow.

Four-inch (4") vents are required for ARVs less than two inches (2”), and six-inch (6”) vents are required for two-inch (2”) ARVs.

4.8 Thrust Blocks

Concrete thrust blocks may be installed on a case-by-case basis (in lieu of or in addition to pipe restraining per these Specifications) at all tees, plugs, bends, and fire hydrants in accordance with the standard drawings.

Where thrust blocks are used in conjunction with eight (8) mil thick polyethylene as a bond breaker, care shall be taken not to block weephole outlets, cover bolts, nuts, clamps, or other fittings or to make them inaccessible. Size of thrust block, type of concrete, and dimensions shall be in accordance with the details in standard drawings. Concrete shall be three thousand (3,000) PSI strength at twenty-eight (28) days.

4.9 Precast Concrete Vaults and Manholes

All butterfly valve and ARV manholes, pressure-reducing valve vaults, meter vaults, and other vaults shall be precast or poured-in-place concrete. Design of manholes and vaults shall be for H-20 traffic loading and shall include aluminum rungs, cast-iron rings, and covers of a pattern approved by the Town Engineer, with the word "WATER" cast thereon, and shall be in accordance with the details in standard drawings. Floors in concrete vaults shall have a minimum two percent (2%) slope toward the sump pit.

4.10 Services

4.10.1 General

Hydrostatic testing, approved bacteriological testing, and conditional acceptance of the Water Mains must be made prior to the installation of any water taps.

Water Service Line locations shall be shown on the utility plans submitted to the Town, and shall be located ten feet (10') up from the downhill lot line. Service Lines shall be installed in a continuous straight line. Service Lines shall be as close to ninety degrees (90º) from Main line as possible. Taps shall be performed by the Town or by the Town's subcontractor under the Town's supervision. Tap saddles will be required. Service Lines in driveways are not permitted. HDPE Service Lines shall be installed horizontally in a "snake-like" configuration to allow for both expansion and contraction of the line in the trench.

4.10.2 Service Lines

A. All residential Service Lines shall consist of a corporation stop at the Main, continuous plastic pipe to a curb stop at the property line, continuous plastic pipe to the meter pit, and continuous plastic pipe up through the slab or floor of the structure in compliance with the latest building code. Residential Service Lines shall be a minimum of one-inch (1") diameter. Plastic pipe will be Crestline CE Blue HDPE pipe DR9, two hundred (200) PSI with stainless steel stiffeners. One-inch (1") HDPE is comparable to a three-quarter-inch (3/4") copper Service Line, although only HDPE Service Lines will be used.

B. HDPE Service Lines shall be the same size from the corporation stop to the curb stop. Then, if necessary, the size of the Service Line may be increased or reduced only after the curb stop to the meter by one size. HDPE Service Lines shall be installed horizontally in a "snake-like" laying configuration, to allow for both expansion/contraction movement of the pipe in the trench. The HDPE Service Line shall consist of one (1) piece of continuous pipe from the corporation stop to the curb stop, no fittings or connections are allowed. The curb stop may not be placed under concrete or paved driveway areas. If the Service Line needs to be extended to accommodate moving the curb stop out of a concrete or paved area, only butt fusion may be used on HDPE pipe to extend the Service Line pipe to the new location of the curb stop.

C. Water and sewer Service Lines may be installed as depicted in the drawings.

D. Tracer wire, as specified herein, shall be extended from the Main to the foundation of the house/structure. Tracer wire shall be extended up the curb stop box per 4.10.2.L below.

E. Service Lines other than residential shall have meters installed inside while new buildings shall have outside meter pits. They shall consist of a corporation stop at the Main, polyethylene to a curb stop, and polyethylene pipe to a point outside the foundation of the structure, in compliance with the latest building code. Meters in building are discouraged but may be approved on a case-by-case basis.

F. The meter fitting and water meter are part of the service. Service Lines larger than two inches (2") shall be ductile iron or polyvinyl chloride and shall have a gate valve at the Water Main.

G. No portion of the building electrical system and/or ground may be attached to the Service Line or internal plumbing such that current may be induced into or from the piping system.

H. Meter vaults shall be concrete and shall have aluminum covers and rings. Meter shall sit in center of vault with same size gaskets with five-eighths-of-an-inch by (5/8") two-inch (2") stainless steel bolts and nuts. All lines shall have a minimum of five-and-one-half feet (5-1/2 ft) of cover, and shall be bedded and backfilled in accordance with these Specifications. Water Service Lines shall be a minimum of one-inch (1") diameter.

I. No flares will be allowed on one-and-one-half-inch (1-1/2") to two-inch (2") installations. Ford pack joint fittings are permitted. Compression fittings either “Q” style or “-22” are acceptable. “Ay” compression fittings are allowed.

J. Meter pits shall have MS 2024308 meter cans. Standard will be 30" although 36" and 48" are acceptable when situation permits. Meter domes shall be 20" standard aluminum with inner lid, and cast-iron top with two-inch (2") hole in center. All meters in a pit shall be placed twelve inches (12") from the bottom of the inner lid for frost protection.

K. All water and sewer service locations shall be clearly stamped in the curb with an “S” for sewer and a “W” for water.

L. Only 3/4” and 1” curb stop boxes shall have a one-and-one-half-inch (1-1/2”) Schd. 40 PVC pipe telescoped inside with a bell end to fit over the top of the curb stop valve. Tracer wire shall be extended up the inside of curb stop box but outside the one-and-one-half-inch (1-1/2”) Schd. 40 PVC pipe. Service Lines greater than 1” in diameter shall not incorporate 1-1/2” Schd. 40 PVC pipe inside of valve box.

4.10.3 Corporation Stops and Curb Stops (or Valves)

Corporation stops and curb stops shall meet the requirements of AWWA Standard C800. Curb stops shall include a curb box installed at the right-of-way line.

Corporation stops shall be Ford FB-1001 or Macdonald 4701B.

Curb stops shall be:

Ford	A.Y. Mcdonald
B46-333 – 3/4"	MCD 76100-(22 or Q) 3/4"
B46-444 – 1"	MCD 76100-(22 or Q) 1”
B46-666 – 1-1/2"	MCD 76100-(22 or Q) 1-1/2”
B46-777 – 2”	MCD 76100-(22 or Q) 2”

For lines larger than two inches (2”), curb stop valves shall be resilient seated and epoxy coated inside and out.

4.10.4 Meters

A. General

1. All water supplied by the Town to a property must be metered. The only exceptions are fire lines.
2. All water meters shall be installed and furnished by the Town at the expense of the property owner and shall become the property of the Town.
3. Water meters will be serviced and maintained by the Town.
4. One-and-one-quarter-inch (1-1/4") meters are not permitted.

B. Meters up to one-and-one-half inch (1-1/2”):

1. Shall be 2” Badger M170.
2. Shall be ¾” Badger RCDL Model 25.
3. Shall be 1” Badger RCDL 70.

C. Meters two inches (2") and larger:

1. Shall be compound meters in cast-iron housing with a disc meter to record small flows and a turbine to record large flows.

2. Shall be calibrated and furnished to indicate gallons.

4.10.5 Backflow Preventers

All backflow prevention devices and installations will be per the Town's standard details (attached) and the Town's Rules and Regulations.

All commercial building shall have a testable backflow device. The devices shall be tested annually and results submitted to the Town.

SECTION 5.0 – WASTEWATER SYSTEM DESIGN STANDARDS

5.1 Quality of the Collection System

The purpose of these Specifications is to ensure that only proven, high-quality materials are installed using first-class workmanship. Determination of the best materials and construction methods are based upon lowest life-cycle costs. Sizing and layout of the system are parts of the total consideration of design, operation, and maintenance of a Wastewater Collection System that yields optimum quality service at the lowest total cost to the Customer.

5.2 Sizing of Collection Mains

The Town reserves the right to size Mains to provide service for projected future needs. All Mains shall be sized large enough to provide for sanitary sewer service for the entire basin area requesting service and shall meet the following requirements:

A. No public sewer shall be less than eight inches (8") in diameter with the exception of small service areas of less than 5 residential taps where six-inch (6") sewers may be used with the approval of the Town.

B. All sewer lines shall be sized to flow at seventy-five percent (75%) of the end area of the pipe or less during peak wet weather flow periods.

C. No Service Line shall be less than four inches (4") in diameter.

D. Residential service pumps will be reviewed and approved by the town on a case by case basis.

5.3 Layout of the Collection System

Width Requirements for Town Main Installations

All Town Mains shall be installed in dedicated public street rights-of-way. When the Town determines it is not possible or feasible for an installation to be made in a dedicated street, the installation shall be made in a right-of-way or easement. The conditions under which such an exception will be allowed will be determined for each individual case, and only rights-of-way and easements which conform to the requirements of the Town will be accepted. The minimum width right-of-way or easement which will be accepted by the Town is twenty feet (20'). Depending on size of Main and depth, additional width may be required.

Dedicated Streets

Pipe alignment shall be parallel to property lines. Normal practice is to lay the pipe on the center line of the street. In any case, pipe alignment shall always be within an established roadway, between the limits of the curb and gutter.

Installation of curvilinear pipelines in sizes eight inches (8") through eighteen inches (18") is acceptable and necessary to obtain the standard location of Sewer Mains. Curvilinear sewers must be designed and constructed using a uniform slope between manholes and shall have a center line radius of one hundred feet (100') or greater. The necessary curvature shall be attained by deflection at joints not to exceed the Manufacturer's recommendations or three-degree (3°) preformed joints or couplings. Field bending of pipe shall not be permitted.

When streets and subdivisions fall in hillside overlay zones or areas with unique characteristics as identified by the Developer and the Town, the Developer and his/her Engineer shall meet with the Town to address concerns of pipeline materials, pipe alignment, pipeline access, landscape restoration, and surface monumentation.

Sewer Main Alignments

Three-degree (3º) pre-manufactured fittings may be used to accomplish the curvature without exceeding individual deflections specified. The maximum deflection at any joint shall not exceed the Manufacturer's recommendation.

Molded three-degree (3º) fittings shall meet the pipe Manufacturer's recommendations and be composed of the same material and meet the same PVC standard as forth for the pipe material. Bends shall be plain end by bell and be laid in the same direction as the pipe-laying operation.

Sewer Collection Lines (sizes 8" thru 12") (Full laying length 13.5 feet)	**8-inch Laying Radius (feet)**	**10-inch Laying Radius (feet)**	**12-inch Laying Radius (feet)**
Without Fittings	875 min.	985 min.	1,150 min.
With 3-degree bend at every fourth joint	N/A	N/A	1,000 to 1,150
With 3-degree bend at every third joint	750 to 875	750 to 875	750 to 875
With 3-degree bend at every second joint	450 to 750	450 to 750	450 to 750

Sewer Service Lines shall be a minimum of four inches (4") in diameter and shall be placed approximately in the middle of the lot and extended into the lot per Detail WW-19. A minimum of one service line shall be installed per roofed structure.

5.4 Manholes

Manholes shall be installed at the end of each line, at all pipeline intersections, changes in grade, changes in size, alignment (except curvilinear sewers) and at distances of not greater than four hundred feet (400'). The town may authorize five hundred feet (500') of pipeline between manholes on a case by case basis. Manholes must also be located to allow unassisted access by Town maintenance vehicles. Lines and manholes located in areas where access (in the opinion of the Town) is not possible will be reviewed on a case-by-case basis.

Curvilinear sections with a reverse curve (i.e. an "S" curve) shall have a manhole located at the point of reverse curvature. If a straight section of pipe is located between curvilinear sections with a reverse curve, a manhole shall be located at some point along the straight section of pipe. A manhole is needed if a curvilinear section, or combination of curvilinear sections, changes the alignment of a Wastewater Main more than 90°.

5.4.1 Manhole Sizes

The inside diameter (I.D.) of the manhole shall not be less than the following:

PIPE SIZE (in)	MANHOLE DEPTH (ft)	MANHOLE SIZE (I.D.)
8" and 10"	0' to 12'	60"
12" to 18"	13' to 19'	60"
24" and larger	20' to 25'	72"

5.4.2 Changing Pipe Size

When sewers are changed in size at a manhole with no intersecting sewers, the manhole invert shall be designed with a one-tenth of one foot (0.1') drop through the manhole.

5.4.3 Intersections

Pipelines deflecting thirty degrees (30°) or less shall have one-tenth of one foot (0.1') drop in the invert through the manhole. Pipe deflections greater than (30°) and less than (90°) shall

have three-tenths of one foot (0.3') drop in the invert through the manhole. Changes in direction at intersections shall not be greater than ninety degrees (90°). Ninety-degree (90°) manholes are generally discouraged and should only be implemented when no other options are available. The slope of the invert through the manhole shall not be less than the shallowest pipe slope entering or exiting the manhole. Intersecting pipelines at manholes with greater than one (1) pipe size difference shall be designed to match crown elevations.

5.4.4 Manhole Channels

The flow channel shall be made to conform its slope and shape to that of the sewer pipe and wherever possible shall use the lower one-half (1/2) of the sewer pipe of the invert of the open channel. The completed channel shall be U-shaped, coming up as high as the top of the largest pipe. At intersections with other lines, channels shall be formed with a curve to minimize turbulence.

5.4.5 Manhole Rings and Covers

Manhole rings and covers shall conform to the attached detail sheets for ring and cover designs. All manholes located outside of dedicated street or alley rights-of-way will be designed and constructed with a locking-type cover and the ring bolted to the concrete cone. Depending on the manhole location, the Town may require "self-sealing" bolt-down lids.

Grade adjustment rings between the ring, cover, and the concrete cone cap shall not exceed eight inches (8") and shall be sealed with conceal mastic between each ring.

Manhole lids shall have hole inside the lid for removal. All manholes shall have an inflow protector insert (IPI) per Section 9.7.

5.4.6 Drop Manholes

Drop manholes with a minimum of five-feet (5') diameter will be permitted only in special conditions where Town approval has been granted.

5.5 Minimum Sewer Depth

In general, Main line sewers should be designed deep enough to drain basements and to prevent freezing. No public Mains shall be less than five-and-one-half feet (5-1/2') deep measured from the top of the pipe. Sewer lines less than five-and-one-half feet (5-1/2') and greater than fourteen feet (l4') shall be given special consideration and reviewed by the Town on a case-by-case basis concerning pipe material and bedding requirements.

5.6 Slopes

All sewers should be designed to transport sewage flows at mean velocities of two feet per second (2 FPS) at seventy-five percent (75%) of the pipe end area based on a roughness coefficient of thirteen one-thousandths (0.013).

The slope between manholes shall be uniform. Due to practical constructability and construction tolerances, the minimum slope of a Wastewater Main shall be 1%. Slopes less than 1.04 % are not recommended and will be reviewed on a case-by-case basis with consideration given to topography, existing outfall elevation, velocity, and capacity.

Slopes less than 1.04% shall be built with DIP or SDR 26 PVC. SDR 26 PVC installed with slopes between 0.5% and 1.04% require select bedding and are subject to additional construction requirements.

The Town may require the use of restrained joint pipe on sections where the Wastewater Main is located outside of paved areas and slope stability is a concern.

Minimum allowable slopes per pipe size are as follows:

8”	0.50%
10”	0.35%
12”	0.29%
15”	0.23%
18”	0.17%
24”	0.13%
30”	0.11%
36”	0.10%

5.7 Construction Tolerances

Vertical construction tolerances for pipe installation shall be one-tenth of a foot (0.10') per one hundred feet (100') of pipe or per manhole run, whichever horizontal distance is greater. Vertical construction tolerances for pipe installation shall be such that no reduction of required flow rate below ultimate peak flow results, and that the pipe slope does not fall below the minimum slope for the size of pipe used.

In circumstances where it may not be feasible or practical to place pipe at the minimum slope, the Contractor may increase the pipe size to the nearest pipe size that will provide an equal flow quantity at an acceptable slope or have continuous on-site surveying for the setting of each joint of pipe. This option must be approved by the Town prior to start of construction.

Horizontal construction tolerances shall be one foot (1.0'), plus or minus, from the design centerline of the pipe.

5.8 High-Velocity Protection

In the case of sewers where the slopes are such that over seven percent (7%) grades are attained, special provisions shall be made to prevent displacement by erosion and shock per detail WW-21. Such high-velocity protection shall be shown on the detail drawings and approved by the Town Engineer.

5.9 Relation to Water Mains

Sewers shall be located a minimum of ten feet (10') horizontally from existing or proposed Water Mains, and the sewer pipe shall be a minimum of eighteen inches (18") clear distance vertically below the Water Main. If this clear distance is not feasible, the crossing must be designed and constructed so as to protect the Water Main. Such crossings shall meet Colorado Department of Public Health and Environment (CDPHE) requirements and shall be approved by the Town.

Minimum protection shall consist of the installation of an impervious and structural sewer as follows:

A. One length of pipe at least fourteen feet (14') long centered over or under the Water Main. For repairs, joints between the existing sewer pipe and the new sewer pipe shall be made with a manufactured adapter approved by the Town and made specifically for such joining.

B. Existing concrete or vitrified clay pipe shall be protected with a fully-reinforced concrete encasement. Encasement shall be at least six inches (6") thick and extend a distance of ten feet (10’) on either side of the Water Main.

C. Deviations from standards require specific Town approval of the crossing. If an approved waiver includes less than an eighteen inch (18”) vertical separation, an annular space shall be provided between the two (2) pipelines.

In all cases, suitable backfill or other structural protection shall be provided to preclude settling or failure of the higher pipe. Depending on pipe material, pier supports may be used.

5.10 Stub-outs from Manholes

Stub-outs from manholes are currently not allowed. However, they may be considered on a case by case basis.

5.11 Inverted Siphons

Inverted siphons are typically not allowed and will be evaluated on a case by case basis.

5.12 Stream and Drainage Channel Crossings

All stream and drainage channel crossings shall be ductile iron pipe encased in reinforced concrete. Crossings of proposed channel bottoms shall be supported by reinforced concrete caissons drilled a minimum of five feet (5') into impervious soil or twenty feet (20'), whichever is less per detail WW-22. In the absence of impervious soils, caissons shall extend twenty feet (20') below the invert of the sewer Main. A fifteen-foot (15’) splash pan consisting of eighteen-inch (18”) to twenty-four-inch (24”) grouted rip-rap shall be placed downstream tapering from six feet (6’) deep at the crossing to three feet (3') deep at the end to prevent erosion per detail WW-23. All stream and channel crossings shall be reviewed and approved by the Town Engineer.

5.13 Crossings Under Railways and Highways

Crossings under railways and highways shall be permitted through the appropriate regulatory agency/agencies and shall meet the most restrictive criteria for each. At a minimum, crossings under railways and highways will consist of pipe laid inside steel pipe conduits, which are jacked or placed by an approved method underneath the track or roadway. The steel conduit pipe shall be placed horizontally through the ground at substantially the grade of the sewer, with due allowance for the bells of the carrier pipe. As the pipe is moved along, the earth shall be excavated from the face and removed so that it will not be necessary to force the pipe through solid ground. The conduit shall be of the sizes shown on the plans. In any case, the conduit diameter shall be a minimum of twelve inches (12") larger than the carrier pipe. After the conduit has been completed, the carrier pipe shall be placed inside and blocked in exact position and grade with approved insulating skids. Each end of the conduit shall then be plugged tight around the ductile iron or steel carrier pipe and the conduit pipe.

5.14 Aerial Crossings

All aerial crossings are not typically allowed and will be evaluated on a case by case basis.

5.15 Metering Vaults

Metering vaults for the purpose of metering wastewater flows shall be prepared and submitted to the Town Engineer for review and approval. All metering vaults shall include, but not necessarily be limited to, the following:

A. The Parshall Flume shall be installed as per the flume’s Manufacturer's recommendations with the following criteria and standard detail as minimum guidelines to ensure the proper functioning of the flume:

- Upstream pipe sections equal to a minimum of twenty-five (25) pipe diameters shall have a slope not less than that required by Section 5.6 of the Specifications without bends, drops, or flow junctions to ensure subcritical flow.

- The downstream pipe sections shall have slope greater than the upstream pipe to ensure supercritical flow.
- The flume itself shall be grouted into the block out at zero percent (0.0%) slope, as shown on the standard detail.
- The flume shall be made of corrosion-resistant materials and supplied with a Manufacturer's rate curve. Shop drawings shall be submitted to the Town Engineer for review and approval prior to installation.

B. Concrete vault is typically required. A minimum six feet (6') I.D. manhole will be considered on a case by case basis.

C. Flow measurement, totalizing, and recording devices.

D. The metering vault shall have a suitable and safe means of access.

E. Flow level sensor and transmitter if required. The flow sensor shall be of a non-intrusive type and shop drawings for the level sensor and transmitter shall be submitted to the Town Engineer for review and approval prior to installation.

F. Manhole ventilation: The Town Engineer may require that the control manhole be vented if it is determined that it is needed to protect the monitoring equipment and ensure proper function of said equipment.

5.16 Pumping Facilities

Pumping facilities may be allowed on Mains in the Town Collection System only where specifically authorized by the Town. The Town will prohibit the installation of pumping facilities where, in its opinion, such installations would be injurious to the operation, or future operation of the Town's Wastewater Collection System.

All proposed pumping facilities shall be considered as a special feature and will be dealt with on an individual case basis. All proposed pumping stations and force Mains shall be approved by the State of Colorado.

A basis for design for all wastewater pumping stations shall have the following features:

A. Wastewater pumping stations shall not be subject to damage by flooding. A suitable superstructure, located off the right-of-way of streets and alleys shall be provided and be readily accessible.

B. Wastewater pump stations shall be of the dry well type.

C. Wet and dry wells, including their superstructure, shall be completely separated.

D. At least two (2) pumps must be provided. If only two (2) pumps are provided, they shall have the same capacity. Each shall be able to handle flows in excess of the expected maximum flow.

E. Adequate ventilation shall be provided for all pump stations to mechanically ventilate the dry well. Wet well vents shall be provided. There shall be no interconnection between the dry well and the wet well ventilating systems.

F. Liquid level controllers shall be located so as not to be affected by flows entering the station. In small stations with duplicate units, provisions shall be made to alternate the pumps in use.

G. Pumping stations shall be equipped with suitable devices for measuring, recording, and totalizing sewage flow and power consumption.

H. Power supply shall be available from at least two (2) independent generating sources, or emergency power equipment shall be provided. Automatic starting of emergency power equipment shall be provided.

I. Alarm systems shall be provided for all pumping stations. The alarm shall activate in cases of pump station malfunction.

J. On-site retention for all wastewater pumping stations shall be provided. The size and capacity of on-site retention will be determined by pump station size, distance from Wastewater Treatment Plant, and location of pump station site, etc.

5.17 Force Mains

All proposed pumping stations and force Mains shall be approved by the State of Colorado. Force Mains and all their appurtenances shall be designed and tested to conform to potable water line criteria and the following minimum requirements:

A. *Velocity*. A design average flow velocity of at least two feet per second (2 FPS) shall be maintained.

B. *Air-relief valves*. An automatic air-relief valve shall be placed at high points in the force Main to prevent air locking.

C. *Termination.* The force Main should enter the gravity sewer system at a point not more than two feet (2') above the flow line of the receiving manhole.

D. *Design pressure.* The force Main and fittings, including reaction blocking, shall be designed to withstand normal pressure and pressure surges (water hammer).

E. *Design Friction Losses.* Friction losses through force Mains shall be based on the Hazen-Williams formula or other acceptable method. When initially installed, force Mains will have a significantly higher "c" factor. The higher "c" factor should be considered.

F. *Separation from Water Mains.* The separation from Water Mains shall be the same as gravity sanitary sewer lines.

G. *Identification.* Where force Mains are constructed of material which might cause the force Main to be confused with potable Water Mains, the force Main shall be appropriately identified.

5.18 Underdrain System

The Town does not allow for the installation of any underdrains.

SECTION 6.0 – WASTEWATER SYSTEM EXCAVATION & SITE STANDARDS

6.1 Earthwork Defined

Earthwork shall include all clearing, grubbing, grading, excavation, fill, backfill, excess excavation, bedding material, on-site material, and surface restoration as may be required to complete the work.

6.2 Traffic Control

Traffic control, signing, detours, and utilization of existing streets require approval by the controlling right-of-way authority, and conforming to the Manual on Uniform Traffic Control Devices standards. Contractors and/or Developers must obtain adequate permitting and approvals from the controlling agency.

6.3 Caution in Excavation

The Contractor shall proceed with caution in the excavation and preparation of the trench so that the exact location of underground utilities and structures, both known and unknown, may be determined. Contractor shall be held responsible for the repair of such structures when broken or otherwise damaged because of carelessness on contractor's part.

The Town cannot guarantee the accuracy of underground utilities and structures as shown on plans and will not be responsible for any damage that may occur during construction.

Whenever, in the opinion of the Town, it is necessary to explore and excavate to determine the location of underground utilities and structures that may interfere with construction, the Contractor shall make the explorations and excavations for such purposes.

6.4 Excavation to Line and Grade

All excavations shall be made to the lines and grades as established by the approved drawings and these Specifications. Pipe trenches shall be excavated to the depth required to provide a uniform and continuous bearing and support for the pipe on solid undisturbed ground at every point between bell holes. Bell holes shall be provided at each pipe joint to permit the joint to be made properly. Any part of the bottom of the trench excavated below the specified grade shall be corrected with approved material and thoroughly compacted as directed by the Town. The finished grade of the trench shall be prepared accurately by means of hand tools. Deviation from line and grade may be allowed when approved by the Town Engineer, in accordance with these Specifications.

6.5 Trenching and Excavation Operations

The trench shall be excavated in a manner which will allow the pipe to be installed to the alignment and depth required. The trench shall be excavated only so far in advance of the pipe laying as is necessary to expedite the work.

A. *Trench width*. All existing asphalt or concrete surfacing shall be cut vertically in a straight line and removed from the job site prior to starting the trench excavation. This material shall not be used in any fill or backfill.

   The trench shall be excavated so that a minimum clearance of six inches (6") shall be maintained on each side of the pipe for proper placement and densification of the bedding or backfill material. Ledge rock, boulders, and large stones shall be removed to provide a clearance of at least six inches (6") below and on each side of all pipe and fittings. The specified minimum clearances are the minimum clear distances that will be permitted between any part of the pipe and appurtenances being installed and any part, projection, or point of such rock, boulder, or stone.

The maximum bottom of trench width, measured at the top of the pipe, shall at a minimum conform with the wastewater standard trench detail regardless of the type of pipe, type of soil, depth of excavation, or the method of densifying the bedding and backfill.

Trenches may be of such extra width, when required, to permit necessary supports, sheeting or bracing, and handling of specials.

B. *Trench support.* The trench shall be adequately supported and the safety of workers provided for, as required by the most recent standards adopted by OSHA Standards Board. Sheeting and shoring shall be utilized where required to prevent any excessive widening or sloughing of the trench, which may be detrimental to human safety, the pipe, appurtenances being installed, existing utilities, existing structures, or to any other existing facility or item.

   Trench support is the sole responsibility of the Contractor. The Town Inspector's presence in no way implies approval of trench support methods being utilized. However, Town staff is required to report OSHA violations and/or injuries that take place on Town projects.

C. *Excavated material.* Excavated material shall not be placed closer than two feet (2') from the top edge of the trench. Heavy equipment should not be used or placed near the sides of the trench unless the trench is adequately braced.

   All excavated material shall be piled in a manner that will not endanger the work and that will avoid obstructing traffic. Hydrants under pressure, valve lid covers, valve boxes, or other utility controls shall be left unobstructed and accessible until the work is completed.

D. *Excavation for structures.* Except as otherwise dictated by construction conditions, the excavation shall be of such dimensions as to allow for the proper installation and removal of concrete forms or precast structures, and to permit the construction of the necessary pipe connections. Care shall be taken to ensure that the excavation does not extend below established grades. If excavation is made below such grades, the resulting excess shall be filled in with approved material deposited in horizontal layers not more than six inches (6") in thickness after being compacted, as directed by the Town.

E. *Excavation in poor soil.* If the bottom of the excavation at subgrade is found to be soft or unstable, or to include ashes, cinders, refuse, vegetable or other organic material, or large pieces or fragments of inorganic material that, in the opinion of the Inspector, cannot satisfactorily support the pipe or structure, then the Contractor shall further excavate and remove such unsuitable material to the width and depth specified by the Inspector.

F. *Protection of existing structures and utilities.* Adequate protection, temporary support, and maintenance of all underground and surface structures, utilities, and other obstructions encountered in the progress of the work shall be furnished by the Contractor at his expense and under the direction of the Town. All structures, utilities, or obstructions disturbed or damaged shall be restored or replaced by the Contractor immediately unless the Town Engineer gives approval for delays in repairs or replacements. If delays are approved, all repairs and/or replacements must be completed prior to the completion of the project.

6.6 Blasting

In general, blasting will be allowed in order to expedite the work if a permit by the local authority having jurisdiction is granted and a copy presented to the Town. All explosives and appurtenances shall be transported, handled, stored, and used in accordance with the laws of the local, state, and federal governments, as applicable.

The contractor shall comply with all laws, ordinances, applicable safe code requirements, and regulations relative to the handling, storage and use of explosives and protection of life and property. The Contractor shall be responsible for all damage caused by blasting operations. Suitable methods

shall be employed to confine all materials lifted by blasting within the limits of the excavation or trench."

Owners or occupants of nearby structures or facilities, within a minimum distance of five hundred feet (500'), must be notified in writing by the Contractor at least seventy-two (72) hours in advance of blasting. The notice shall state the date, the time of blasting, and who is responsible for the blasting. The Town shall be notified a minimum of seventy-two (72) hours in advance of any blasting.

Blasting shall be controlled to avoid making any excavation unduly large or irregular, and so as not to shatter the rock on the bottom or sides of any excavation or surface upon or against which concrete is to be placed. If, in the opinion of the Town, blasting is liable to damage rock foundations or supports, concrete, other utilities, or structures, all blasting shall be terminated and excavation shall be continued by jack-hammering, barring, wedging, or other methods.

6.7 Dewatering

All pipe trenches or structure excavation shall be kept free from water during pipe laying and other related work. The method of dewatering shall provide for a completely dry foundation at the final lines and grades of the excavation.

Dewatering shall require a construction dewatering permit from the CDPHE.

Dewatering shall be accomplished by the use of well points, sump pumps, rock or gravel drains placed below subgrade foundations, or subsurface pipe drains. All water shall be disposed of in a suitable manner without being a menace to public health or causing public inconvenience. The dewatering operation shall continue until such time as it is safe to allow the water table to rise in the excavations. Pipe trenches shall contain enough backfill to prevent pipe flotation. When pipe is installed in a casing or tunnel longer than thirty (30) pipe diameters, the pipe inside and casing or tunnel shall be secured so flotation does not occur when the pipe is empty.

Water shall not be allowed to rise until any concrete has set and the forms have been removed. Water shall not be allowed to rise unequally against unsupported structural walls.

6.8 Pipe Bedding

It is expected that the trench excavation will provide suitable bedding and backfill material. Wet, soft, or frozen material, asphalt and concrete chunks, cinder ashes, refuse, vegetable or organic material, boulders, rocks, or other deleterious substances shall not be used for bedding or backfill.

If the excavated material is not suitable for bedding or backfill as determined by the Inspector, suitable material shall be hauled in and utilized, and the rejected material hauled away and disposed.

Six inches (6") of squeegee or ¾" crushed rock shall be placed on the trench bottom for support under the pipe and compacted. Squeegee or ¾" crushed rock are the only materials to be used for pipe bedding, no native is allowed for pipe bedding.

Bell holes shall be dug deep enough to provide a minimum of two inches (2") of clearance between bell and bedding material. All pipe shall be installed in such a manner as to ensure full support of the pipe barrel over its entire length. After the pipe is adjusted for line and grade and the joint is made, bedding material (squeegee sand) shall be carefully placed and tamped under the haunches of the pipe and in the previously-dug bell holes.

"Tamping" is herein defined as the act of placing approved bedding material under the haunches of pipe, paying particular attention to voids, bell holes, and sling holes. The purpose of tamping is to ensure uniform support for the pipe.

A. *Pipes*. Unless select bedding material is required, all pipelines shall be bedded by hand, from the bottom of the trench to the centerline of the pipe, with sand, gravel, or other approved material

placed in layers of three inches (3") and compacted. Bedding material shall be deposited in the trench for its full width on each side of the pipe, fittings, and appurtenances simultaneously.

The pipe shall be bedded by approved mechanical methods from the centerline of the pipe, fittings, and appurtenances to a depth of twelve inches (12") above the top of the pipe. Special care shall be used in placing this portion of bedding so as to avoid disturbing the pipe.

PVC pipe shall be installed in accordance with ASTM D2321 and the Manufacturer's recommendations, unless otherwise specified herein.

DIP pipe shall be installed in accordance with AWWA C600-23 and the Manufacturer's recommendations, unless otherwise specified herein.

The trench shall be backfilled by approved mechanical methods from twelve inches (12") above the pipe to the grade shown on the plans or specified herein.

B. *Structures*. Backfill and fill within three feet (3') adjacent to all structures and for full height of the walls shall be selected, non-swelling material. It shall be relatively impervious, well graded, and free from stones larger than one and one half inches (1 1/2"). Material may be job excavated, but selectivity will be required. No backfilling will be allowed in freezing weather except by permission of the Town. No additional backfill will be allowed over any frozen material already in the trench.

6.9 Select Bedding Material

When indicated on the plans or drawings or when, in the opinion of the Inspector, select bedding material is required, preparation and installation shall be as follows:

A. *Installation of bedding and pipe*. After completion of the trench excavation and proper preparation of the foundation, six inches (6") of bedding material shall be placed on the trench bottom for support under the pipe and compacted. Bell holes shall be dug deep enough to provide a minimum of two inches (2") of clearance between the bell and bedding material.

All pipe shall be installed in such a manner as to ensure full support of the pipe barrel over its entire length. After the pipe is adjusted for line and grade, and the joint is made, the bedding material shall be carefully placed and tamped under the haunches of the pipe and in the previously-dug bell holes.

If approved by the Town, fines from the trench wall and soil pile may be used to provide uniform support for the pipe. No rock or stone larger than allowed by the sieve analysis, or any other detrimental substance, shall be placed closer to the pipe than six inches (6"). The Town reserves the right to require the use of select bedding material at any time.

For ductile iron and polyvinyl chloride pipe, the limits of bedding shall be from six inches (6") below the bottom of the pipe to twelve inches (12") above the top of the pipe.

B. *Bedding material.* Bedding material shall be a clean squeegee sand, free of corrosive properties, and shall conform to the following gradation limits when tested by means of laboratory sieves:

Squeegee Sand

Sieve Size	Total Percent Passing by Weight
3/8 inch	100
No. 200	– 5

C. *Foundation material*. Foundation material shall be uniformly graded, washed rock conforming to the sieve analysis below. A minimum of twelve inches (12") of foundation material shall be placed below the pipe to the trench bottom.

Foundation Material

Sieve Size	Total Percent Passing by Weight
2 inch	95 – 100
1/2 inch	10 – 30
#4	0 – 5

D. *Flowable fill*. On a case-by-case basis and at the Town's option, utility trench backfill meeting the requirements in the table below may be used in lieu of native backfilling in any excavation, regardless of width or depth. Concrete-slurry type, full-depth backfill will not be allowed within the public right-of-way. Compaction and testing of utility trench backfill will not be required if material meeting the following specification is used:

Flowable Fill

Ingredient	**lb./cubic yard**
Cement	42 (0.47 sack)
Water	325 (43 gallons or as needed)
Coarse Aggregate (Size # 57)	1,700
Sand (ASTM C-33)	1,845

6.10 Backfill and Compaction

No section of Wastewater Main, Wastewater Main appurtenance, or Wastewater Main structure shall be backfilled until the Inspector has examined and approved that section of the installation. Backfill is defined as the material placed from twelve inches (12") above the pipe to grade. **All backfill and compaction within the public right-of-way shall be in conformance with the excavation permit granted by the Town Engineer or the controlling authority. All backfill an compaction must also be in compliance with the geotechnical report.**

Satisfactory compaction reports shall be submitted to the controlling authority prior to the completion of the project. The controlling authority (city, county, state) shall specify the exact number and locations of tests required. Railroad, airport, and other private or special situations will require investigation and research to determine exact requirements and regulations.

All water required for backfill and compaction operations can be furnished from a designated fire hydrant near the project. The Contractor will be charged in accordance with the current cost for construction water. However, the Contractor will be responsible for furnishing all required personnel, valving, hose and other equipment needed to deliver the water to the desired location on the project. The Town will designate the fire hydrant to be used and must be notified when water is required.

6.11 Cleanup

Upon completion of the work, all rubbish, unused materials, concrete forms, and other like materials shall be removed from the job site. All excess excavation shall be disposed of as specified and the areas shall be left in a state of order and cleanliness. Contractor shall be responsible for cleaning the streets after equipment is moved out of the job site.

6.12 Surface Restoration and Maintenance

A. *Surfaced areas*. The Contractor shall obtain the necessary permits and remove pavement and road surfaces as part of the trench excavation. As a minimum, cuts in a public right-of-way shall be required to be restored per the conditions of the excavation permit issued by the Town Engineer or the controlling authority. The Contractor shall restore all pavement, sidewalks, curbing, gutters, or other surface structures removed or disturbed as part of the work to a condition meeting the standards of the governing authority, and shall furnish all incidental labor and materials.

B. *Unsurfaced areas.* All surface areas' cuts shall be restored to a condition equal to that prior to construction.

C. *Damaged surfaces and property.* If any pavement, street, shrubbery, sod, rock, fences, poles, or other property and surface structures have been damaged, removed, or disturbed by the Contractor (whether deliberately or through failure to carry out the requirements of the controlling agency or the specific directions of the Town, or through failure to employ usual and reasonable safeguards), such property and surface structures shall be replaced or repaired, to the original condition, at the expense of the Contractor.

SECTION 7.0 – WASTEWATER SYSTEM PIPE-LAYING STANDARDS

7.1 Handling of Materials

Pipe and fittings shall be loaded and unloaded by lifting so as to avoid shock or damage. Under no circumstances shall such material be dropped. If, however, any part of the coating or lining is damaged, the replacement or repair of the damaged pipe shall be done to the satisfaction of the Town at the expense of the Contractor. Any pipe or fittings that are not acceptable to the Town shall be removed from the job site immediately. All pipe-handling equipment and pipe-handling methods shall be approved by the Town in conjunction with the methods and equipment recommended by the Manufacturer.

7.2 Inspection and Preparation of Pipe and Fittings

Before placing pipe in the trench, each pipe or fitting shall be thoroughly cleaned of all foreign material, kept clean at all times thereafter, and carefully examined for cracks and other defects before installation. Bell ends and spigot ends are to be examined with particular care. Defective pipe or fittings shall be laid aside for inspection by the Inspector who will prescribe corrective repairs or rejection.

All lumps, blisters, and excess coatings shall be removed from the bell-and-spigot end of each pipe and fitting, and the outside of the spigot and the inside of the bell shall be wire brushed and wiped clean, dry, and free from oil and grease before the pipe or fitting is installed. Dirt and any other material must be removed from the barrel of the pipe before installation.

7.3 Cutting and Fitting of Pipe

Pipe shall be cut, whenever necessary, to conform to location of fittings, line, or grade. All cuts shall be straight and true, and in a workmanlike manner so as to leave a smooth end without damaging the pipe or its cement lining. All burrs shall be removed from the ends of cut pipe, and the end lightly rasped or filed. All tools used in cutting pipe shall be approved by the Town.

7.3.1 Pipe Joint Lubrication

Joint lubricant shall be supplied by the pipe Manufacturer and approved by the Town. Joint lubricant shall be non-toxic and water soluble.

7.3.2 Pipe Alignment and Grade

In laying pipe, the intent is to lay to set line and grade. Fittings and manholes shall be installed at staked locations and elevations.

When laying pipe on curves, the intent is to lay to the staked alignment. The pipe shall be kept in alignment by placing all deflecting joints or bends on the curve. Short lengths shall be used as necessary to accomplish the curvature without exceeding individual deflections specified. The maximum deflection at any joint shall not exceed one-half (l/2) of the Manufacturer's recommendation.

The Engineer may use eleven-and-one-fourth-degree (11.25°) bends on a case-by-case basis as approved by the Town. These bends shall be shown on the design plans and staked in the field. At no time shall eleven-and-one-fourth-degree (11.25°) bends be used to reduce the radius below the minimum of one hundred feet (100').

Any changes in alignment and grade must be authorized by the Inspector and shall be approved by the Town. Pipe shall be laid up grade with the bell ends facing in the direction of laying, unless directed otherwise by the Town. Where pipe is to be installed on a grade of ten percent

(10%) or greater, the laying shall start at the bottom and shall proceed upward with the bell ends of the pipe up grade.

7.3.3 Temporary Bulkheads

Whenever the pipe is left unattended, temporary plugs shall be installed at all openings to isolate existing pipelines from new construction until accepted by the Town. Temporary plugs shall be of such design as to prevent water, debris, children, and animals from entering the pipe. All temporary plugs shall be provided by the Contractor and approved by the Inspector.

7.3.4 Frost

No pipe or appurtenant structure shall be installed upon a foundation into which frost has penetrated, or at any time when the Inspector deems there is danger of ice formation or frost penetration at the bottom of the excavation. No pipe or appurtenant structure shall be installed unless backfilling can be completed before the formation of ice and frost.

7.3.5 Lowering of Material into the Trench

Proper implements, tools, and facilities satisfactory to the Town shall be provided and used by the Contractor for the safe and convenient performance of the work. All pipe, fittings, and manholes shall be carefully lowered into the trench piece by piece, by means of a derrick, ropes, or other suitable tools or equipment, in such a manner as to prevent damage to Wastewater Main materials and their protective coatings and linings. Under no circumstances shall Wastewater Main materials be dropped or dumped into the trench.

If damage occurs to any pipe, fitting, manhole, or Wastewater Main accessories in handling, the damage shall be immediately brought to the attention of the Inspector. The Inspector shall prescribe corrective repairs or rejection of the damaged items at the Contractor’s expense.

7.4 Laying of Pipe

All pipe-laying methods shall conform to the Manufacturer's recommendations for laying pipe. Every precaution shall be taken to prevent foreign material from entering the pipe while it is being placed in the line. If the pipe-laying crew cannot put the pipe into the trench and in place without getting earth into it, the Inspector may require that, before lowering the pipe into the trench, the pipe be sealed on both ends to prevent dirt and debris from entering. .

As each length of pipe is placed in the trench, the spigot end shall be centered in the bell and the pipe forced home with a slow, steady pressure, without jerking or jolting movements, and brought to correct line and grade. The pipe shall be secured in place with approved backfill material tamped under it except at the bells. Precautions shall be taken to prevent dirt from entering the joint space. No wooden blocking shall be left at any point under the pipeline.

No pipe shall be laid when, in the opinion of the Town, trench conditions are unsuitable.

7.5 Ductile Iron Pipe

A. DIP may be used for wastewater lines through thirty inches (30”).

B. Shall meet requirements of AWWA Standard C151.

C. Pipe class shall be a minimum of Cl 350 for all sizes, unless otherwise specified on the approved drawings.

D. Joints shall be "push-on single gasket" type meeting requirements of AWWA Standard C111.

E. Cement-mortar lining shall be provided meeting the requirements of AWWA Standard C104.

F. If not delineated on the approved plans, all ductile iron pipe shall have cathodic protection using double No. 6 wire bonding with seventeen pound (17 lb.) anodes every four hundred feet (400') and nine pound (9 lb.) anodes on each fitting.

G. Pipe shall be poly wrapped with V-Bio Polyethylene Encasement or approved equal.

Push-on joint. Immediately before two (2) lengths of ductile iron pipe, the inside of the bell, outside of the spigot end, and the rubber gasket shall be thoroughly cleaned to remove oil, grit, excess coating, and other foreign mater. The rubber shall be flexed inward and inserted in the gasket recess of the bell socket. Since different manufactured brands of pipe require different types of gaskets, the Contractor shall exercise caution to ensure that the correct type of gasket is used.

A thin film of approved gasket lubricant shall be applied to either the inside face of the gasket, the spigot end of the pipe, or both.

The spigot end of the pipe shall be placed in the bell end with care to prevent the joint from contacting the ground. Pipe furnished without a depth mark on the spigot end shall be marked before assembly to ensure insertion to fill depth of the joint. The pipe shall be kept in straight alignment and the joint shall be completed by pushing the pipe home with slow, steady pressure without jerking or jolting movements, by using a forked tool, jack-type tool, or other device approved by the Town Engineer. If pipe is pushed home with a backhoe bucket, a wooden shield must be placed between the backhoe bucket and the end of the pipe. The spigot end of field-cut pipe lengths shall be filed or ground to resemble the spigot end of such pipe as manufactured.

Bolt Size	Ft. Lbs.
5/8”	40-60
3/4”	75-90
1”	85-100
1-1/4”	105-120

Nuts spaced one hundred and eighty degrees (180°) apart shall be tightened alternately in order to produce equal pressure on all parts of the gland.

7.6 Polyvinyl Chloride Pipe

Upon completion of joining push-on joint pipe, an inspection shall be made to assure that the gasket is correctly aligned in the gasket recess of the bell socket and not twisted or turned.

When laying pipe on curves, the intent is to lay to the staked alignment. The pipe shall be kept in alignment by placing all deflecting joints or bends on the curve. Short lengths shall be used as necessary to accomplish the curvature without exceeding individual deflections specified. The maximum deflection at any joint shall not exceed one-half (1/2) of the Manufacturer's recommendation.

A. *Elastomeric gasket joint.* Immediately before joining two (2) lengths of PVC pipe, the inside of the bell or coupling, the outside of the spigot, and the elastomeric gasket shall be thoroughly cleaned to remove all foreign material.

   Lubrication of the joint and rubber gasket shall be done in accordance with the pipe Manufacturer's specifications.

Care shall be taken that only the correct elastomeric gasket, compatible with tile annular groove of the bell, is used. Insertion of the elastomeric gasket in the annular groove of the bell or coupling must be in accordance with the Manufacturer's recommendations. Pipe that is not furnished with a depth mark shall be marked before assembly to ensure that the spigot end is inserted to the full depth of the joint.

The spigot and bell or coupling shall be aligned and pushed until the reference line of the spigot is flush with the end of the bell or coupling. Pushing shall be done in a smooth, steady motion. Upon completion of joining the pipe, an inspection shall be made to ensure that the gasket is correctly aligned in the gasket recess of the bell socket and not twisted or turned.

B. *Pipe storage.* Pipe stored outside and exposed to sunlight for more than thirty (30) days shall be covered with an opaque material such as canvas. Clear plastic sheets shall not be used to cover pipe. Air circulation shall be provided under the covering.

C. *Handling of pipe in cold weather.* PVC pipe has reduced flexibility and impact resistance as temperatures approach and drop below freezing. Extra care should be used in handling and installing PVC pipe during cold weather.

7.7 Manholes

Manholes shall be precast and shall be constructed in accordance with these Specifications. Precast manholes shall be made **watertight** after installation or construction by use of approved methods. All manholes are to be eccentric. Manhole steps shall PFS-1-DF double face straight leg, and meet OSHA ratings for clear width, rung spacing, toe clearance All dimensions, locations, and elevations shall be determined by the Engineer or the Developer's Engineer and meet the requirements of the Town.

All manholes shall be constructed to meet H.S. 20-44 traffic loading conditions and three hundred pounds per square foot (300 PSF) surcharge load.

Tracer wire coming into manholes shall have a two-foot (2') hanging length inside the manhole.

The Town may require installation of a precast manhole base when weather or field conditions warrant.

For cast-in-place manhole bases on existing pipe, a gasket must be installed on all existing pipe penetrations within the outside extents of the cast-in-place base.

The base shall be placed on compacted or undisturbed earth.

Eight-inch (8") adjustment rings are to be set on top of eccentric cone as required to reach final grade and shall be grouted.

All joints, manhole rings, adjustment rings, and cones shall be made watertight by installation of Ram-Nek or approved equal material in the joint. Grouting shall be applied to any voids or gaps prior to placing manhole into service.

Barrels shall be wrapped with RU116 - RUBR-NEK External Joint Wrap (or approved equal) and coated.

The manhole ring shall be set on the cone on a full ring of Ram-Nek.

Manhole steps shall be stainless steel with a rubber coating.

7.8 Bridging and Encasement of Pipe

Under certain conditions, when the Wastewater Main is to be installed over or under an existing or proposed utility or structure, the Town may require bridging or encasement of the proposed wastewater pipe.

If, in the opinion of the Town Engineer, there exists the possibility of settlement of the pipe being installed over an existing utility or structure, then bridging of the pipe shall become necessary. This condition shall also apply to other underground utilities or structures being installed over existing Wastewater Mains. The Town Engineer shall determine the size and location of the concrete bridging.

Under certain conditions, the Town may require complete encasement of Wastewater Mains with concrete. The Town Engineer shall determine the size, length, and location of these encasements.

7.9 Encasement or Sleeve Pipe

Wherever it is necessary to provide an encasement or sleeve for the Wastewater Main, the Wastewater Main shall not be inserted into the encasement or sleeve pipe without providing insulating skids for each joint of the Wastewater Main. Insulating skids shall be of a type such as the "PSI custom pull on (Model C)" or approved equal. Skids shall ensure that the pipe does not move in high groundwater conditions due to buoyancy.

Encasement pipes shall be protected both inside and out with corrosion-resistant materials having a bituminous base and/or shall include cathodic protection. Encasement or sleeve pipe size, length, type, and sidewall thickness will be determined by the Town.

7.10 Corrosion Protection Systems

The determination of the corrosiveness of the soil through which a Wastewater Main passes and the need for protection will be made and determined by the Town. If metal pipe is required to be used, it must be protected against corrosion. All required corrosion protection shall be provided by the Contractor and the material shall be made up of all or part of the following:

A. *Polyethylene encasement material.* The pipe, fittings, and appurtenances shall be wrapped in polyethylene, in accordance with Standard Drawing WW-12 Polyethylene material, and shall conform to page MS-04 of the materials specifications.

B. *Coatings.* Metal pipe and other appurtenances may require protective, corrosion-resistant coating. The following are approved for exterior use only:

- Roskote A-51 Mastic
- American Blackline Product #101 – Non-Fibrous Roof Coat
- Asphaltic Base Roofing Tar

Coatings must be of a consistency that is applicable by brush and cannot contain asbestos fiber. In all cases, the Contractor must provide the Inspector an MSDS on the product to be used prior to application.

C. *Bonding joints.* All pipelines that require protection will be bonded at every joint and/or coupling. Bonding shall be accomplished by thermo-welding straps or wire across each joint or coupling. The Contractor shall furnish all material required for bonding.

D. *Anodes.* Installation of seventeen pound (17 lb) magnesium anodes may be required for additional protection to the pipeline. All anodes shall be furnished and installed by the Contractor in conformance with these Specifications.

E. *Test stations*. Required electrolysis test stations will be provided and it shall be the Contractor's responsibility to install the test station.

F. *Dissimilar materials.* Cathodic protection and insulation shall be installed as required by the Town. Particular care shall be taken to insulate between dissimilar materials.

G. *Insulating joints.* Whenever it is necessary to join pipe of dissimilar metal, or when designated by the Town, a method of insulating against the passage of electrical current, approved by the Town Engineer, shall be provided. Special care shall be exercised during the installation of these joints to prevent electrical conductivity across the joints.

H. *Polyethylene encasement material.* Whenever designated by the Town, the metallic pipe and all appurtenances shall be wrapped in polyethylene. The polyethylene encasement shall prevent contact between the pipe and bedding material, but is not intended to be a completely air-tight and watertight enclosure.

Prolonged exposure to sunlight will eventually deteriorate polyethylene film. Exposure to sunlight shall be kept to a minimum.

The polyethylene shall have a minimum thickness of eight (8) mils and conform to the Materials Specification in MS-13 from AWWA C105.

A two-inch (2") wide, ten (10) mil thickness polyethylene pressure-sensitive tape shall be used to close seams, secure to pipe, or hold overlaps.

Damage to polyethylene-wrapped pipe in the trench prior to and during backfill shall be repaired to the satisfaction of the Town.

I. *Insulating from concrete.* Areas of metal pipe and appurtenances which are to be in contact with concrete-bridging blocks or encasement shall be protected against corrosion prior to installing concrete. The following types of protection systems are acceptable:

1. Application of a cold-applied coating.
2. Application of a cold-applied primer and corrosion-resistant pipe wrap with a minimum fifty percent (50%) overlap similar to the primer and pipe wrap manufactured by the Protecto Wrap Company (or approved equal).

   Other proposed protection systems may be accepted following review and approval of the Town and the Town Engineer.

7.11 Cleaning

Prior to acceptance of each section of sewer Main (from manhole to manhole), the Contractor shall, at Contractor's expense, jet rod and/or vac each section. Larger sewers shall be cleaned by other appropriate methods approved by the Inspector. All dirt and debris shall be prevented from entering the active sewer system by means of watertight plugs or other methods approved by the Inspector. Each section of sewer Main shall be video inspected prior to acceptance by the Town.

7.12 Compaction Tests

Compaction tests at the expense of the Contractor shall be conducted by an independent testing laboratory, see Section 5 of these Specifications. One test shall be conducted for each manhole run, each manhole or structure, or every four hundred feet (400'), whichever is greater, or as required by the controlling agency. Copies of each compaction test report will be given to the Inspector prior to approval.

7.13 Infiltration and Exfiltration Tests

Infiltration and exfiltration tests conducted by and at the expense of the Contractor shall be performed on 100% of the project.

The allowable infiltration or exfiltration rate shall not exceed fifty (50) gallons per inch of diameter per mile of pipe, per day **to include manholes**.

Air Tests. The Contractor shall perform these tests with suitable equipment specifically designed for air testing sewers. A suitable gauge shall be used for readings not to exceed 15 PSI maximum reading. The gauge shall be located at the surface.

The air test shall be made when the sewer is clean. The pipe, or section of pipe to be tested, may be wetted before the air test. The line shall be plugged at each manhole with pneumatic balls. Low-pressure air shall be introduced into the plugged line until the internal air pressure reaches four (2.0) PSIG greater than the average back pressure of any ground water pressure that may submerge the pipe. At least two (2) minutes shall be allowed for the air temperature to stabilize before readings are taken and the tuning is started.

The portion of Main (including stubs) being tested shall pass if it does not lose air at a rate to cause the pressure to drop from three and six-tenths (3.6) to three (3.0) PSIG (greater than the average back pressure of ground water that may submerge the pipe) in less time than listed below:

PIPE DIAMETER (inches)	**MINIMUM ALLOWABLE TIME** (Minutes & Seconds) 3.6 – 3.0 PSIG Pressure
4	0-50
6	1-10
8	1-40
10	2-00
12	2-20
15	3-00
18	3-40
21	4-10
24	4-50

If the installation fails this test, the testing equipment shall be used to determine the location of the pipe leak. All service plugs shall be secured in place to prevent displacement during testing operations.

If results of these tests are not satisfactory, the Contractor, at his expense, will make the necessary repairs or pipe replacement until the Inspector is satisfied that the leakage requirements are being met.

7.14 Deflection Test

Flexible conduits shall be tested by the Inspector. Representative samples will be tested to ensure initial deflection does not exceed pipe manufacturer's recommendations.

Failure of representative sections to pass the deflection limits will result in additional sections being tested at the discretion of the Inspector.

If the results of this test are not satisfactory, the Contractor at his expense will make the necessary repairs or pipe replacement until the Inspector is satisfied that the deflection requirements are being met.

7.15 TV Inspection

At the expense of the Contractor, the Town Inspector shall inspect by closed circuit television, all new public Mains for deficiencies prior to any service connections being made.

The Town Inspector may require that the Contractor add water to the pipeline prior to TV inspection to help identify deficiencies.

All deficiencies found during the TV inspection shall be promptly corrected by the Contractor in accordance with these rules.

An electronic copy of the CCTV inspection shall be made available to the Town upon completion.

7.16 Vacuum Testing for Concrete Sewer Manholes

All manholes shall be vacuum tested, at the expense of the contractor, with Town staff present prior to CCTV inspection.

This test method covers procedures for testing precast concrete manhole sections (and other manholes, existing or in-situ) when using the vacuum test method to demonstrate the integrity of the installed materials and the construction procedures.

This test method is used for testing concrete manhole sections utilizing mortar, mastic, or gasketed joints. This test method is intended to be used as a preliminary test to enable the installer to demonstrate the condition of the concrete manhole.

Contractor must follow OSHA requirements for confined spaces.

Contractor must use his own equipment, or subcontract, for vacuum testing.

Each manhole shall be vacuum tested after backfilling.

A. All lift holes and any pipes entering the manhole are to be plugged and sealed. A vacuum will be drawn and the vacuum drop over a specified time period is used to determine the acceptability of the manhole (reference D and E below).

B. The values recorded are applicable only to the manhole being tested and at the time of testing, and the recorded information, reported on the *Vacuum Testing Result* form, at the end of this section.

C. Preparation of the Manhole

   1. Care shall be taken to affect a seal between the vacuum base and the manhole rim. Pipe plugs shall be secured to prevent movement while the vacuum is drawn.

   2. All pipes entering the manhole shall be temporally plugged, taking care to securely brace the pipes and plugs to prevent them from being drawn into the manhole.

D. Typical Field Test Procedure

   1. The test head gauge shall be placed at the top of the manhole or in accordance with the Manufacturer's recommendations.

   2. A vacuum of ten (10) in. of mercury shall be drawn on the manhole, the valve on the vacuum line of the test head closed, and the vacuum pump shut off. The time shall be measured for the vacuum to drop to nine (9) in. of mercury.

   3. The manhole shall pass if the time for the vacuum reading to drop from ten (10) in. of mercury to nine (9) in. of mercury meets or exceeds the values indicated in the table below.

   4. If the manhole fails the initial test, necessary repairs shall be made by a submitted, approved method to the Town Inspector. The manhole shall then be retested until a satisfactory test is obtained.

Town of Paonia
Manhole Vacuum Test Log 2025

Inspected By:_____ Location: _____
Date: _____ Contractor: _____

5-Foot I.D.	➢ 75 Seconds
6-Foot I.D.	➢ 90 Seconds
7-Foot I.D.	➢ 105 Seconds
8-Foot I.D.	➢ 120 Seconds
10-Foot I.D.	➢ 150 Seconds

E. Minimum test time for all manholes is 60 seconds. Greater lengths of time shall be at the discretion of the Inspector.

7.17 Manhole Rim Elevations

All manholes constructed shall have rim elevations set at final street, trail, or sidewalk grades, except in non-traffic areas where the rims shall be set at six inches (6") above the existing ground. Following the construction of curb and gutter in new streets or completion of manholes in streets with existing curb and gutter, the Engineer will measure and certify all manhole rim elevations for proper grade. At no time shall the total of grade adjustment rings exceed eight inches (8"). Any manhole rims that do not meet the following policy for manhole adjustment will be promptly adjusted, except within state and federal jurisdiction or rights-of-way.

A. *Responsibility.* The applicant requesting approval for extension of Wastewater Collection Lines shall be responsible for assuring sanitary sewer manholes are adjusted to final paving grade and are cleaned of dirt and construction debris. The applicant shall also ensure that:

1. Such work is completed within the time periods noted below.
2. All work is completed in compliance with these Specifications and all Town requirements.
3. Such work has been inspected by the Town.
4. Such work will be free of mechanics liens, judgment liens, or other valid and enforceable liens.

B. *Required adjustments.* Manhole adjustments and cleaning must be completed within sixty (60) days following placement of paving. If street paving is not completed or manholes are not adjusted within one (1) year of the preliminary acceptance date, the Town will extend the warranty period for one (1) additional year during which manhole adjustments must be completed as indicated above.

C. *Location of manholes to be adjusted.* The Town will attempt to provide surface location of manholes requiring adjustment within two (2) working days of request for location.

D. *Opening and entry permit and inspection.* The person, contractor, or corporation performing the adjustment work must apply for a manhole opening and entry permit two (2) working days prior to beginning work and must notify the Inspector designated on the permit when the work is ready for inspection. The designated Inspector will perform the inspection within two (2) working days of the request for inspection and will provide the permittee a notice of acceptance or rejection of the work. Correction of rejected terms must be completed within the time frame noted by the Inspector.

E. *Failure to perform adjustments.* Failure of the applicant for Wastewater Collection extension to adjust the manholes in accordance with the requirements of this policy will result in the Town exercising any combination of the following rights:

   i. Withholding approval of additional connection permits within the project area

   ii. Extension of the warranty period until adjustments are completed

   iii. Performing the necessary manhole adjustments and cleaning work by contract or with Town personnel and billing the expense plus administration, legal, overhead and other applicable expenses to the applicant

7.18 Service Line Inspection

Service stubs and building sewer lines shall not be backfilled until approval is given by the Town Inspector. Any deficiencies noted by the Inspector shall be corrected by the Contractor prior to calling for reinspection. The Contractor and builder or Developer will be notified in writing by the Inspector of all deficiencies requiring correction.

After approval is given for Service Stubs or building sewers, the Contractor shall commence backfilling in accordance with these Specifications, as soon as practical.

SECTION 8.0 – WASTEWATER SERVICE STANDARDS

8.1 Wastewater Taps

Single saddle tap allowed on existing Mains. Multiple saddle taps on existing Mains are discouraged and must be reviewed and approved by the Town on a case by case basis. No wastewater taps shall be made unless property corners are clearly marked so measurements of taps can be made at the time of tapping. All four-inch (4") Wastewater Service Lines must be connected to Main and are not allowed to tie into manholes. Taps shall enter the existing main at the 12 O'clock position. Services larger than four inches (4") must be reviewed and approved by the Town's Engineer.

8.2 Excavations

Excavation of the tapping hole is the responsibility of the plumber or pipeline Contractor. Installations and excavations must be performed by the Town or supervised or approved by Town staff.

8.3 Abandoning Existing Connections

Where an existing Wastewater Service is to be abandoned, the owner of the property shall be totally responsible for expenses. The Contractor shall expose the connection to be abandoned two feet (2') inside the property line unless otherwise specified by the Town. Services found to be unacceptable shall be capped at the public Main. The Town shall inspect the work prior to backfilling of the excavation. If a service stub-out is over five (5) years old, the Town can elect to have it removed and abandoned in place at the expense of the landowner.

8.4 Individual Service Pumps

Where conditions require external installation of individual pumps to service a structure, the Contractor shall submit a set of shop drawings detailing the installation for review and approval by the Town, and shall include:

A. A site map showing the location of all the facilities to be installed including the location of the tap to the public Wastewater Main.

B. Equipment to be installed, including the number and type of pumps, controls, alarms, and valves.

8.5 Wastewater Service Line Ditches

Wastewater Service Line ditches must enter lots as close to ninety degrees (90°) to the street as is practical and not at an extreme angle unless otherwise approved. Standard location for the Service Line is center of lot unless in a hillside overlay zone and/or approved by the Town.

8.6 Inline Wye

Wastewater Service Lines shall be constructed with an approved Wastewater Service inline wye.

8.7 Installation Method

All Wastewater Service Lines shall be installed using the same methods as the public Main.

8.8 Slope

Wastewater Service Lines shall be installed at the following minimum slopes:

4" PVC	2.08% or 1/4” per foot
4" Ductile Iron	1.04% or 1/8” per foot
6" Pipe	1.04% or 1/8” per foot

8.9 Alignment

Changes in alignment for Service Lines shall be accomplished with preformed bends not to exceed forty-five degrees (45°). When changes in direction exceed forty-five degrees (45°), a two-foot (2') section of pipe shall separate the fittings necessary to make the needed change of direction. All services shall be extended ten feet (10') inside the property line or easement line, and be marked with a two-by-four (2 x 4) post.

8.10 Cleanouts

All Wastewater Service Lines shall have dual cleanouts at each bend, five feet (5’) away from the foundation and every one hundred feet (100'). All cleanouts shall be constructed with standard fittings and have a screw cap located at the ground or paving surface.

8.11 Connecting Clamps

All Wastewater Service Line-connecting clamps shall have the "UPC" designation and be made for the pipeline materials used.

8.12 Repair and Replacement of Existing Service Lines

8.12.1 Responsibility

The property owner is responsible for the repair and maintenance of the Wastewater Service Line from the house or other building to the public main.

Plumbing or pipeline Contractor's responsibility. The plumbing or pipeline Contractor shall make the necessary excavations, barricade all excavations in accordance with the barricading instructions of the governing body, make the necessary repairs, and contact the Town for inspection.

8.12.2 Surface Restoration and Maintenance

A. *Surfaced areas.* The Contractor shall obtain the necessary permits and remove pavement and road surfaces as part of the trench excavation. **At a minimum, cuts in a public right-of-wav shall be required to be restored per the conditions of the excavation permit issued by the controlling authority**.

   The Contractor shall restore all pavement, sidewalks, curbing, gutters, or other surface structures removed or disturbed as part of the work to a condition meeting the standards of the governing authority, and shall furnish all incidental labor and materials.

B. *Unsurfaced areas.* All surface cuts shall be restored to a condition equal to that prior to construction and meet vegetation requirements per the Stormwater Management Plan.

C. *Damaged surfaces and property.* If any pavement, street, shrubbery, sod, rock, fences, poles, or other property and surface structures have been damaged, removed, or disturbed by the Contractor (whether deliberately or through failure to carry out the requirements of the controlling agency or the specific directions of the Town, or through failure to employ usual and reasonable safeguards), such property and surface

structures shall be replaced or repaired to the original condition, at the expense of the Contractor.

SECTION 9.0 – WASTEWATER SYSTEM MATERIALS STANDARDS

9.1 Polyvinyl Chloride Pipe and HDPE Pipe – 4-inch Through 24-inch Diameter

General. All polyvinyl pipe shall be manufactured in accordance with ASTM Standard D3034, *Polyvinyl Chloride (PVC) Sewer Pipe and Fittings*, and ASTM Standard F679 *Polyvinyl Chloride (PVC) Large-Diameter Plastic Gravity Sewer Pipe and Fittings* with the following additional requirements or exceptions:

A. *Size of pipe.* This specification shall cover polyvinyl chloride pipe in four-inch (4"), six-inch (6"), eight-inch (8"), ten-inch (10"), twelve-inch (12"), fifteen-inch (15"), and eighteen-inch (18") nominal diameters. Pipe larger than eighteen-inch (18") diameter shall be reviewed and approved on a case-by-case basis.

B. *Joint type.* Pipe joints shall be made using an integral bell with an elastomeric gasket push-on type joint or using machined couplings of a sleeve type with rubber ring gaskets and machined pipe ends to form a push-on type joint.

C. *Class and type.* All sizes of pipe shall be SDR35 or PS 46.

D. *Pipe length.* Each length of pipe will be a standard laying length of twelve-and-one-half feet (12.5').

E. PVC materials shall be made from class I2364C, 12454C, or 12454B virgin compounds as defined in ASTM F679 or ASTM D3034.

F. Elastomeric gaskets shall conform to ASTM D32 or ASTM F477.

G. Force Main pipe shall be either C-900 PVC, DR14, ductile iron pipe, or HDPE 4710 DR-11 through DR-9.

9.2 Ductile Iron Pipe

General. All ductile iron pipe shall be manufactured in accordance with AWWA Standard C151, *Ductile Iron Pipe, Centrifugally Cast in Metal Molds or Sand-Line Molds, for Water or Other Liquids*, with the following additional requirements or exceptions:

A. *Size of Pipe.* This specification shall cover ductile iron pipe in four-inch (4"), six-inch (6"), eight-inch (8"), twelve-inch (12"), sixteen-inch (16"), twenty-inch (20"), twenty-four inch (24"), thirty-inch (30"), and thirty-six-inch (36") nominal diameters.

B. *Joint Type.* "Push-on Single Gasket" type conforming with applicable requirements of AWWA Standard C111 *Rubber-Gasket Joints for Cast-Iron and Ductile Iron Pressure Pipe and Fittings*.

C. *Class and Type.* Pipe furnished under this specification shall conform to the following pressure classes as shown in AWWA Standard C-150, at a minimum:

Size	Pressure Class (PSI)	Equivalent Thickness (In.)
4" Diameter	Class 350	0.25
6" Diameter	Class 350	0.25
8” Diameter	Class 350	0.25
12" Diameter	Class 350	0.28
26" Diameter	Class 330	0.34
20" Diameter	Class 300	0.36
24" Diameter	Class 250	0.37
30" Diameter	Class 200	0.38
36" Diameter	Class 200	0.42

Higher pressure class pipe will be required when the Town determines that excessive dead-load or other conditions warrant increased wall thickness.

D. *Pipe Length.* Pipe furnished under this specification will have normal laying lengths of either eighteen feet (18') or twenty feet (20').

E. *Material Strength.* Iron used in the manufacture of pipe furnished under this specification shall have 60/42/10 physicals.

F. *Cement-Mortar Lining.* Pipe furnished under this specification shall have standard thickness cement-mortar linings in accordance with AWWA Standard C 104/A21/4, *Cement-Mortar Lining for Ductile Iron and Gray Iron Pipe and Fittings for Water*.

9.3 Polyethylene Encasement Material

General. A polyethylene encasement material shall be manufactured in accordance with AWWA Standard C105, *Polyethylene Encasement for Gray and Ductile Case Iron Piping for Water and Other Liquids*, with the following additional requirements or exceptions:

A. *Materials.* The raw material used to manufacture polyethylene film shall be Type 1, Class A Grade E-I, in accordance with ASTM Standard Designation D-1248.

B. *Physicals.* The polyethylene film shall meet the following test requirements:

Tensile Strength	1200 PSI minimum
Elongation	300% minimum
Dielectric Strength	800 V/Mil Thickness minimum
Thickness 0.008" (Nominal with minus tolerance. Not exceeding ten percent (10%) of nominal.)	(8) mils minimum
Melt Index	0.4 maximum

9.4 Concrete

A. *Materials.* Cement. All cement used shall be Portland Cement acceptable under the "Standard Specifications and Tests for Portland Cement," ASTM Designation C-l50 of the ASTM and conform to the latest ACI 318 building code requirements. Cement used shall be Type II.

B. *Aggregates.* All the fine and coarse aggregates shall meet soundness requirements, deleterious substance limits, and grading limits as set forth in the latest edition of "Standard Specifications for Concrete Aggregates," ASTM Designation C-33. The limits for deleterious substances and physical property requirements of the coarse aggregates shall be selected for the applicable class designation from those listed under severe weathering regions, Table 3, ASTM Designation C-33. The maximum size aggregate that is practical for the structure design and placing conditions shall be used in the concrete.

C. *Water.* The water used in all concrete shall be free from objectionable quantities of silt, organic matter, alkali, salts, and other impurities.

D. *Admixtures.* An air-entraining agent shall be used in all concrete. The agent used shall conform to "Standard Specification for Air-Entraining Admixtures for Concrete," ASTM Designation C-260. The amount of air-entraining agent shall be such as will affect the entrainment of five percent (5%) plus or minus one percent (+ or – 1%) of volume of the concrete.

A water reducing admixture (WRA) may be used unless otherwise noted by the Town. The admixture shall conform to ASTM Designation C-494 for Type A, or Type D chemical

admixture, shall contain no calcium chloride, and shall be compatible with the cement being used.

E. The Contractor shall be responsible for any difficulties arising or damages occurring as a result of the selection and use of any admixture such as a delay, difficulty in concrete placing, or damage to concrete during form removal.

F. *Concrete quality.*

1. All cast-in-place concrete shall have a minimum twenty-eight (28) day compressive strength of three thousand (3,000) PSI and maximum slump of four inches (4").
2. All precast concrete shall have a minimum compressive strength of four thousand (4,000) PSI.
3. Unless otherwise directed, the concrete shall be consolidated with suitable mechanical vibrators operating within the concrete. Vibrators shall be so manipulated as to work the concrete thoroughly around the reinforcement and imbedded fixtures, and into corners and angles of the forms. The vibration at any point shall be sufficient to accomplish consolidation, but not prolonged to the point where segregation occurs.
4. Testing. When determined necessary by the Town, field control tests consisting of aggregate gradation tests, slump tests, air content tests, and making compression test cylinders shall be performed by qualified personnel in the presence of the Inspector.

9.5 Concrete Reinforcement

A. *General.* Reinforcements shall be accurately formed and shall be free from loose rust, scale, and contaminants which reduce bond.

Unless otherwise shown on the drawings or specified herein, all requirements shall conform to the latest ACI Standard 318 and the Uniform Plumbing Code.

Reinforcements shall be accurately positioned on supports, spacers, hangers, or other reinforcements and shall be secured in place with wire ties or suitable clips.

B. *Material.* All deformed reinforcing bars shall conform to ASTM Standard A-615, minimum grade 60.

9.6 Precast Reinforced Concrete Manhole Sections

General. All precast, reinforced manhole sections shall be manufactured in accordance with ASTM Standard C478, *Precast Reinforced Concrete Manhole Sections*, with the following additional requirements or exceptions:

A. *Size*. This specification shall cover precast, reinforced manhole sections in five-foot (5') and six-foot (6’) nominal inside diameters.

B. *Joint type*. Manhole joints shall be made using male and female ends so that, when assembled, they make a continuous and uniform manhole.

C. *Joint sealant*. Manhole joints shall be watertight using "Ram-Nek," or approved equal, and installed on each ‘bench’ of grooved joint, resulting in two (2) parallel layers of sealant.

D. *Manhole Base***.** Manhole base shall be 8” thick concrete for 5’ and 6’ diameter manholes. Manhole base is to be pre-cast or cast in place and shall conform to standard detail WW-2.

9.7 24-inch Diameter Manhole Ring and Cover

A. *General.* All twenty-four-inch (24") manhole ring and covers shall be manufactured to meet H-20 traffic load conditions and have a minimum inside ring clearance of twenty-two-and-one-eighths inches (22-1/8”).

B. *Material.* All rings and covers shall be cast-iron, manufactured in accordance to ASTM Designation A48, Class 30, or better.

C. The manhole lid shall be drilled with a one-half-inch (l/2") hole, six inches (6") off center to the right of the word “SEWER.”

D. Depending on the location of the manhole, the Town will require "self-sealing" lids or "self-sealing," bolt-down lids. Deater Foundry 1257B or approved equal.

E. *Manufacturer.* All manhole assemblies shall be stamped with the name and model identification of the approved Manufacturer.

F. The *IPI* when and where requested by the Town and components shall be manufactured from corrosion-proof material suitable for atmospheres containing hydrogen sulfide and dilute sulfuric acid, as well as other gases associated with wastewater collection systems.

The insert body shall be manufactured to the dimensions as shown on the contract drawings to allow easy installation in the manhole frame.

Relief Valve. The gas relief valve shall be designed to relieve at a pressure of one (1) PSI or less. The venting tube shall be capable of sealing out dirt and small debris. The valve shall be recessed into the bottom center of the insert so that it is protected and will not be broken by any movement of the cover over the valve. This valve configuration will allow the shallowest practicable insert design, eliminating unnecessary water retention or weight accumulation. The valve shall be easily removed for water drainage should inspection be required immediately after or during rainstorm.

Lift Strap. The insert shall have a lift strap attached to the body. Attachment of the lift strap to the insert body shall be in a recess to prevent contact with manhole cover during removal and replacement of the manhole cover.

Sizing. The IPI shall be manufactured to fit the manhole frame rim from which it hangs. Specific field measurements may be required prior to production of the insert.

Installation. The manhole frame rim shall be cleaned of all dirt or debris before placing the insert upon the rim. The insert shall be fully seated around the manhole frame rim to retard water from seeping between the insert and the manhole frame rim.

Appendix A

REQUEST FOR DEVIATION
WATER AND WASTEWATER SYSTEM STANDARD SPECIFICATIONS

PRODUCT NAME: _____

PRODUCT DESCRIPTION:_____

_____

_____

_____

_____

_____

_____

DISTRIBUTOR'S NAME: _____

DISTRIBUTOR'S ADDRESS: _____

DISTRIBUTOR'S PHONE NUMBER: _____

MANUFACTURER'S NAME: _____

MANUFACTURER'S ADDRESS: _____

MANUFACTURER'S PHONE NUMBER: _____

- Give current standard that this product complies with (ASTM, AWWA, etc.).
- Attach any product information that the manufacturer wishes considered.
- Attach list of current users of this product that we can contact.
- Review of this product by the Town does not guarantee its acceptance or use in the water or wastewater system. A test section or project maybe required prior to general acceptance or use.

Appendix B

WATER AND SEWER MAIN EXTENSIONS

Any changes or alterations affecting the grade, alignment, elevation, and/or depth of cover of any water or sewer mains or other appurtenance shown on this drawing shall be the responsibility of the Owner/Developer. The Owner/Developer shall be responsible for all operational damages and defects in installation and material for mains and services from the date of approval until final acceptance is issued.

Signed _____ Date _____
Owner/Developer

Print Name _____

DBA _____

Address _____

_____

FIRE AUTHORITY APPROVAL

The number of fire hydrants and hydrant locations shown on this water installation plan are correct and adequate to satisfy the fire protection requirements as specified by the Fire District serving the property noted on the plans.

Fire Protection District _____

Signed _____ Date _____
Fire Protection District

TOWN APPROVALS

The Town of Paonia recognizes the Design Engineer as having responsibility for the design and has limited its scope of review accordingly.

TOWN OF PAONIA WATER DESIGN APPROVAL

Date: _____ By: _____

PROJECT NO. _____

In case of errors or omissions with the water design as shown on this document, the standards as defined in the "Town of Paonia Water and Wastewater System Standard Specifications" shall rule.

Approval expires 180 days from Design Approval.

The Town of Paonia recognizes the design engineer as having responsibility for the design and has limited its scope of review accordingly.

TOWN OF PAONIA WASTEWATER DESIGN APPROVAL

Date: _____ By: _____

PROJECT NO. _____

In case of errors or omissions with the wastewater design as shown on this document the standards as defined in the "Town of Paonia Water and Wastewater System Standard Specifications" shall rule.

Approval expires 180 days from Design Approval.

Appendix C

TOWN OF PAONIA
GENERAL NOTES

General

1. All utility construction to be conducted in conformance with the current Town of Paonia (the Town) Specifications.

2. All plans on the job site shall be signed by the Town and the Town's Engineer. Any revision to the plans shall be so noted with the old drawing marked 'not valid.'

3. All stationing is centerline unless otherwise noted. All elevations are pipe invert unless otherwise noted.

4. All materials and workmanship shall be subject to inspection by the Town. The Town reserves the right to accept or reject any such materials and workmanship that does not conform to its standards and specifications.

5. All over-lot grading must be completed to within one (1) foot of final grade prior to installation of water and wastewater infrastructure.

6. All water and sewer service locations shall be clearly marked on either the curb head or the face of the curb, with an "S" for sewer and a "W" for water.

7. Ductile iron pipes, including fittings, valves, and fire hydrants, shall be wrapped with polyethylene tubing, double bonded at each joint, and electrically isolated. Bonding and anode connections shall be thoroughly coated with bituminous coatings.

8. All ductile iron pipe less than twelve inches (12") and fittings shall have cathodic protection using two (2) no. 6 wires with 17 lb. magnesium anodes every 400 feet and 9 lb. magnesium anodes at each fitting. All ductile iron pipe twelve inches (12") and greater and fittings shall have cathodic protection using two (2) no. 6 wires with 17 lb. magnesium anodes every 300 feet and 9 lb. magnesium anodes at each fitting.

9. All pipe material, backfill, and installation shall conform to the applicable specifications of the Town, Colorado Department of Transportation, Delta County Department of Secure Transportation Services, Town of Paonia Utilities, and the geotechnical engineer.

10. Compaction tests shall be 95% standard proctor as determined by ASTM D698, unless otherwise approved by the Town or higher standard as imposed by another agencies having right-of-way jurisdiction. This shall include all valves, fire hydrant runs, water & sewer service lines, and manholes. All reports shall be submitted to the Town for review and approval.

11. The location of all existing utilities shown on the drawings are approximate only. The location of all utilities shall be field verified prior to commencing construction activities. The Town shall be notified of any deviations to the line and/or grade as depicted on the plans. Contractor shall submit to the Town and the engineer of record a report of the field-verified information prior to the start of construction.

12. All bends shall be field staked prior to the start of construction.

13. Bends, deflection, and cut pipe lengths shall be used to hold horizontal alignment of sewer and water lines to no more than 0.5' from the designed alignment. Construction stakes to be at twenty-five feet (25') intervals along curves to ensure location of pipeline construction.

14. At all locations where cap and stub is noted on drawings, provide a plug at the end of the pipe joint nearest the specified station. Provide a reverse anchor at all water line plugs.

15. All unused, salvaged water utility material shall be returned to the Town as requested.

16. At the contractor's expense, all utility mains shall be supported and protected such that they shall function continuously during construction operations. Should a utility main fail as a result of the contractor's operation, it shall be replaced immediately by the contractor or by the Town at full cost of labor and materials to the contractor/developer.

17. Pumping or bypass operations shall be reviewed and approved by both the Town and the Town engineer prior to execution.

18. The contractor shall replace or repair damage to all surface improvements, including but not limited to fences, landscaping, curb and gutter, and/or asphalt that may be caused during construction.

19. All contractors working on or near a water or sewer facility (to include service lines) shall have liability insurance naming the Town as an additional insured and shall provide a current copy of workers compensation insurance on file with the Town. No work can proceed without current certificates on file at the Town's office.

20. The contractor shall notify the Town and all affected utility companies adjacent to the proposed utility construction a minimum of 48 hours and a maximum of 96 hours prior to the start of construction. A weekly construction meeting shall be required with the contractor, Town engineer and all other parties as deemed necessary by the Town.

21. Commencement of construction of water/sewer systems within the Town:

    a) Prior to the start of construction, a <u>preconstruction meeting is required</u> a minimum of 48 hours in advance of commencement of work. A representative of the owner or developer, a representative of the contractor, and Design Engineer are required to attend. Contact the Town to schedule the preconstruction meeting. <u>No preconstruction meeting can be scheduled before four (4) signed/approved plan sets are received by the Town</u>.

    b) The contractor is required to notify the Town a minimum of 48 hours and a maximum of 2 weeks prior to the start of construction. The contractor shall also notify affected utility companies at least 48 hours prior to the start of construction adjacent to the known utility lines.

22. Testing of facilities:

    a) The contractor shall notify the Town a minimum of 48 hours and a maximum of 96 hours prior to the start of any testing.

    b) All sections of water line are to meet the following pressure testing requirements
       - Test 100% of all lines.
       - Must pass pressure test to 200 PSI for two hours (unless otherwise approved on the plans).

    c) All sanitary sewer facilities are to meet the following testing requirements:
       - All lines shall be jet cleaned prior to vacuum or pressure testing.
       - All manholes shall be vacuum tested with Town staff present prior to CCTV inspection.
       - Sewer mains to be pressure tested prior to CCTV inspection.
       - All lines shall be CCTV inspected and video shall to be submitted to the Town for review and approval.

23. Preliminary acceptance shall be defined as the point in time that the Town accepts the facility for use. All surface improvements and restoration shall be completed within 30 days of commencement. Should the Contractor fail to complete all surface improvements and restoration within 30 days of commencement of service, the Town, at their discretion, may elect to complete the improvements at the Contractor's cost.

24. Final acceptance by the Town of any line or system shall not occur until completion of final asphalt layers and/or final completion and/or restoration of all surface improvements. The warranty period for all facilities prior to final acceptance shall be **24 months** commencing after preliminary acceptance.

25. Acceptance

    a) The Town may give preliminary acceptance once all of the tests on all the lines have been completed and a walk-through has occurred.

    b) A second acceptance may occur once the first lift of asphalt goes down and a second walk-through of the system occurs. If all facilities are clean and accessible, a final acceptance may occur (the Town may require cleaning and re-video of the system, depending on the severity of the contamination).

26. All water and sewer mains, including service lines, shall have "as-built" drawings prepared and approved prior to preliminary acceptance by the Town.

27. All commercial/business developments shall have an eight inch (min.) water main looped through the proposed property with gate valves located where the main enters the property line. An eight-inch sewer main shall be installed for service to commercial/business developments, and a manhole shall be located where the main enters the property. The end of the mains shall be marked with the appropriate colored carsonite marker along with tracer wire.

28. After review and approval of plans for the extension of lines, facilities, and/or services, construction must have commenced within 18 months for residential subdivisions and 12 months for any commercial installations.

29. Inspection fees: Call the Town (970-527-4102) for fee schedule.

Water System Installation Notes

30. All water and force main pipe shall be AWWA C900 PVC, or approved equal, pressure class 200. All water and force main fittings shall have mechanical restraints and thrust blocks. All water and force main pipe shall have a minimum cover depth of five-and-one-half (5.5) feet.

31. All water valves associated with the potable water system shall be open counterclockwise. All valves installed in landscaped areas and/or not within paved streets shall be marked with carsonite markers. All valves associated with the raw water system shall be open counterclockwise and marked with carsonite markers as applicable.

32. The Developer or his engineer shall locate all fire hydrants and service stub-outs for future development. Any required realignment, horizontal or vertical, shall be at the expense of the developer. Fire hydrant location shall be reviewed and approved by the applicable Fire Authority.

33. Fire hydrants shall be open left with 7/8" x 7/8" square tapered along with service caps. Lubrication type: Grease. Acceptable brand is Kennedy Guardian (K81D, K81A, and K81AM). Each fire hydrant location shall also be used as test station.

34. All main lines (PVC & ductile iron) shall be installed with coated #12 tracer wire with test stations at intervals no greater than five hundred feet (500') (valve boxes can be used at intersections and service stubs).

35. Contractor shall make connections to existing water line without shutdown, or else notify the Town of any service shutdowns necessary to connect to existing lines.

36. Irrigation services shall have a stop-and-waste curb stop valve installed along with tracer wire extending back to the main line.

37. Commencement of use of water lines and/or systems:

    a) No water facility shall be placed in service until after the completion of all pressure testing, flushing, Bac-T testing, and compaction testing, and as-built drawings are submitted and approved by the Town.

    b) No water facility shall be placed in service until all service lines are completed and the first lift of asphalt is completed over the line. In the case where no asphalt is to be placed over the line, surface improvements shall be completed prior to use of the facility.

    c) No water facility shall be placed in service until all easements (platted or deeded) are dedicated, executed by the Town, and recorded.

Wastewater System Installation Notes

38. Sanitary sewer lengths are MH center to MH center. All sanitary sewer pipes shall be SDR 35 PVC or approved equal. Sewer lines may not exceed 7% grade for any size without prior approval of the Town. All newly constructed residential sanitary sewer taps shall use pre-manufactured, inline PVC push-on wyes. Single saddle tap allowed on existing mains. Multiple saddle taps on existing mains must be approved by the Town on a case by case basis

39. All sanitary sewer manholes shall be wrapped with RU116 - RUBR-NEK joint wrap, or approved equal, and coated.

40. All sewer lines must be bedded with squeegee or ¾" crushed rock.

41. Commencement of use of sewer lines and/or systems:

    a) No sanitary sewer facility shall be placed in service until the completion of all jet cleaning, pressure testing, vacuum testing, CCTV inspection, and compaction testing, and as-built drawings are submitted and approved by the Town.

    b) No sanitary sewer facility shall be placed in service until all service lines are completed and the first lift of asphalt is completed over the line. In the case where no asphalt is to be placed over the line, any required surface improvements shall be completed prior to use of the facility.

    c) No sanitary sewer facility shall be placed in service until all necessary easements (platted or deeded) are dedicated, executed by the Town, and recorded.

    d) Downstream plug can be removed once the first lift of asphalt is down and the above requirements are met.

The above guidelines are subject to change at any time.

Appendix D

Grease Interceptor Standards

A. General

A grease interceptor shall be installed when, in the judgment of the Town Administrator, it is necessary for the proper handling of liquid wastes containing grease or solids, which may be harmful to or cause obstruction of the publicly-owned treatment works, or interfere with the operation of the treatment works and its mains.

All food preparation establishments shall install a grease interceptor to all drains from the kitchen, food preparation, and dishwashing areas. Fixtures to be connected include, but are not limited to, scullery sinks, pot and pan sinks, dishwashing machines, soup kettles, and floor drains located in areas where grease-containing materials may exist. When deemed necessary by the Town, garbage disposals may be required to be connected to an approved interceptor.

Toilets, urinals, and similar fixtures shall not waste through the interceptor. All waste shall enter the interceptor through the inlet pipe only.

Installation of an interceptor will not be required of facilities that do not cook the food that is served and/or do not wash equipment or utensils associated with preparation or service of cooked foods.

B. Approval

The size, type, and location of each interceptor shall be approved and inspected by the Town, in accordance with Town standards regarding interceptors. Except where otherwise specifically permitted, no wastes other than those requiring separation shall be discharged into any interceptor. One (1) set of plans, including complete mechanical and plumbing sections shall be submitted to the Town for approval prior to construction. Such plans shall include the size, type, and location of each interceptor.

C. Design

All interceptors for grease and heavy solids shall be so designed and located as to be readily accessible for cleaning and shall have a water seal of not less than six inches (6"). Interceptors shall be constructed in accordance with the design specifications contained herein, shall be approved by the Town Administrator, and shall have a minimum of two (2) compartments with fittings designed for grease retention. There shall be a minimum of two manholes to provide access for cleaning and inspection of all fixtures and compartments of the interceptor; a minimum of one (1) per ten feet (10') of interceptor length. In the ease of smaller or circular interceptors, where it is not practical to install two (2) manholes, a single manhole shall be located so as to permit entrance to the first compartment and inspection to the second. All areas of the second compartment shall be accessible for cleaning.

D. Location

All interceptors shall be readily accessible for inspection, servicing, and maintaining in proper working condition. The use of ladders or the removal of bulky equipment in order to inspect or service interceptors shall constitute a violation of accessibility. Where feasible, all interceptors shall be located outside of the facility served. Interceptors may not be installed in any part of a building where food is handled. Location of all interceptors shall be approved by the Town Administrator and shall be shown on the approved building plan.

E. Maintenance

Interceptors shall be maintained by regularly-scheduled removal of the accumulated grease and solids. This maintenance shall be performed before the retention capacity of twenty-five percent (25%) of the

interceptor. Failure to clean the interceptor at twenty-five percent (25%) or more of capacity shall incur a $500.00 penalty for discharging grease into the sanitary sewer system. Records of maintenance shall be maintained on site and be available for inspection during regular business hours.

F. Sizing Criteria

When determining the minimum size of the interceptor required, the following shall be considered:

The minimum acceptable volume shall not be less than seven hundred fifty (750) gallons. With a dishwasher, it shall not be less than one thousand (1,000) gallons.

The size of the interceptor shall be based on maximum number of meals served at the maximum periods of the day (either breakfast, lunch, or dinner). Volume, in gallons, of the interceptor shall be two-and-one-half (2 ½) gallons multiplied by the maximum number of meals served during the busiest period of the day.

An alternate method of determining the size of the grease interceptor is to multiply seating capacity times a turnover constant of one and six tenths (1.6) times two-and-one-half (2 ½) gallons. Seating capacity can be approximated, using ten (10) square feet of dining area per person (volume = seating capacity x 1.6 x 2 ½ gallons).

When the above methods are not feasible, an appropriate volume may be determined by multiplying the total rate of flow, in gallons per minute, from each fixture required to be connected to the interceptor times a minimum retention time of not less than fifteen (l5) minutes, with the resulting volume expressed in gallons.

TYPE OF FIXTURE	RATE OF FLOW (GPM)
Floor drain/sink	10
Restaurant kitchen sink	15
Single-compartment scullery sink	20
Three-compartment sink	35
2 single-compartment sinks	25
2 double-compartment sinks	35
Restaurant dishwasher	
Up to 30-gallon capacity	15
30- to 50-gallon capacity	25
50- to 100-gallon capacity	40
Garbage disposal/grinder	35

G. Waivers

Waivers to the above standards and criteria shall be valid only when the discharge from the user is in compliance with the Town's regulations.

In the event that a waiver of the minimum size requirement is granted, in no case shall the retention capacity of the trap be less than one hundred pounds (100 lb.). The minimum inspection/cleaning frequency of any indoor trap shall be monthly, and a written record of all inspections or maintenance shall be maintained on site.

Standard Drawings – Water

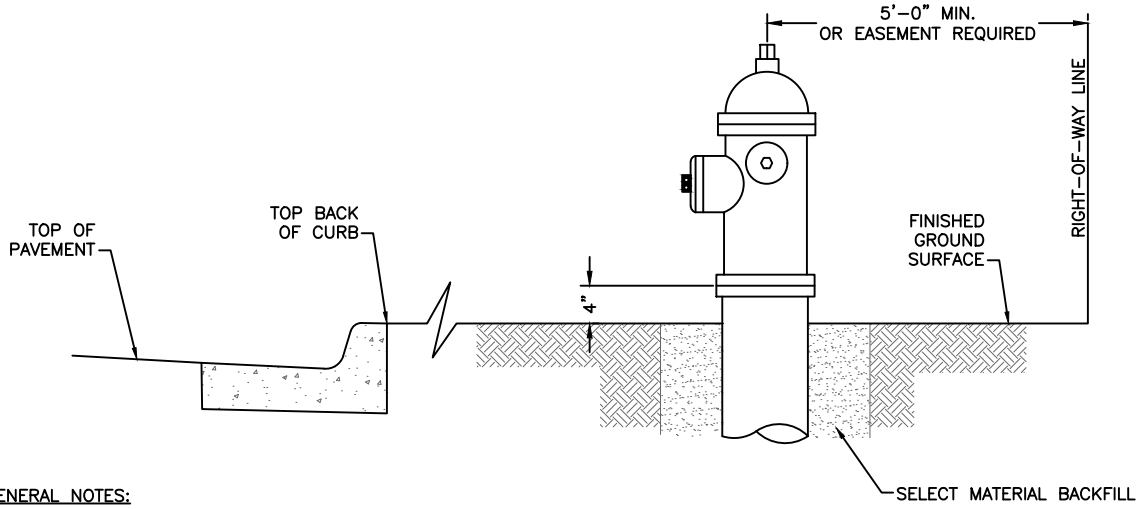

GENERAL NOTES:

1. HYDRANT NOZZLE SHALL BE POSITIONED AT RIGHT ANGLES TO THE CURB. IF NO CURB OR SIDEWALK EXISTS, NOZZLE SHALL BE PLACED AT RIGHT ANGLES TO STREET OR ALLEY.
2. HYDRANTS INSTALLED AT FLAG LOT LINES SHALL BE OFFSET 3 FEET FROM THE LOT LINE (AWAY FROM STEM).
3. HYDRANTS WILL BE PLACED A MINIMUM OF 5 FEET FROM ANY UTILITY OR DRAINAGE STRUCTURE.
4. EASEMENTS MUST BE PROVIDED FOR ANY PUBLIC HYDRANT WHICH IS CLOSER THAN 5 FEET TO THE RIGHT-OF-WAY LINE.
5. ANY HYDRANTS BEING INSTALLED WITH CONDITIONS OTHER THAN THOSE MENTIONED AND/OR DETAILED BELOW WILL REQUIRE SIGNED APPROVAL FROM THE TOWN AND THE FIRE DEPARTMENT.

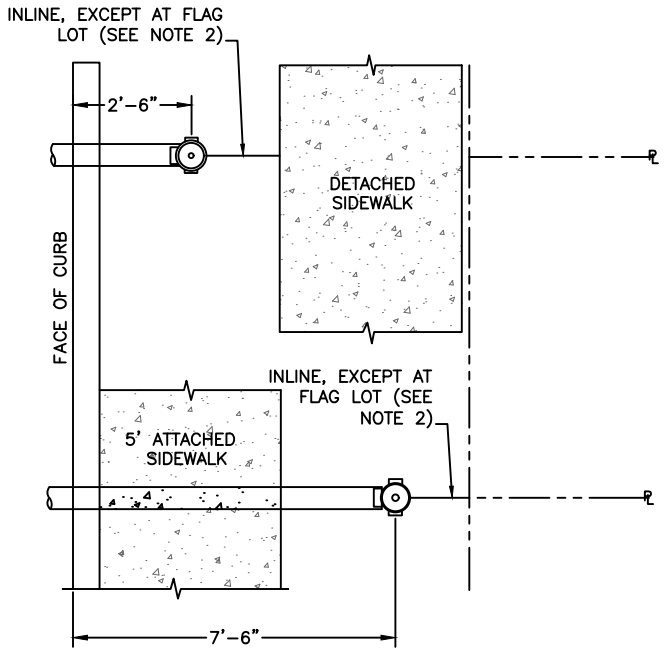

LOT LINE LOCATIONS

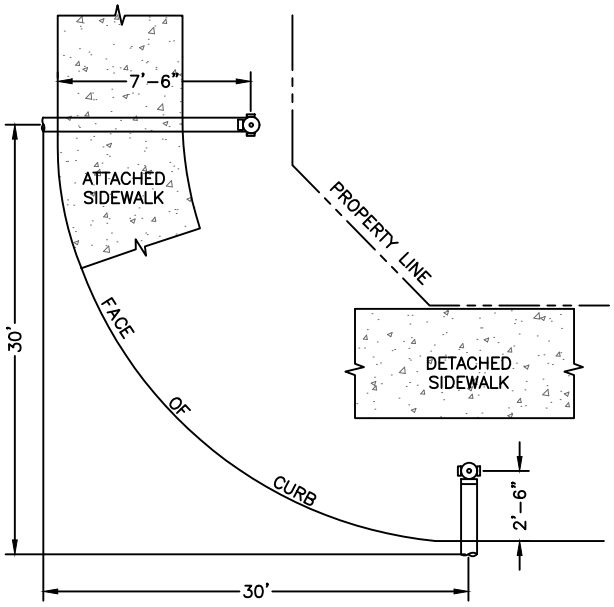

CORNER LOCATIONS

FIRE HYDRANT LOCATIONS

Drawn: IGL	Revised:	PAONIA COLORADO	W-1
Date: JANUARY 2026	Revised:		
Scale: N.T.S.	Revised:		

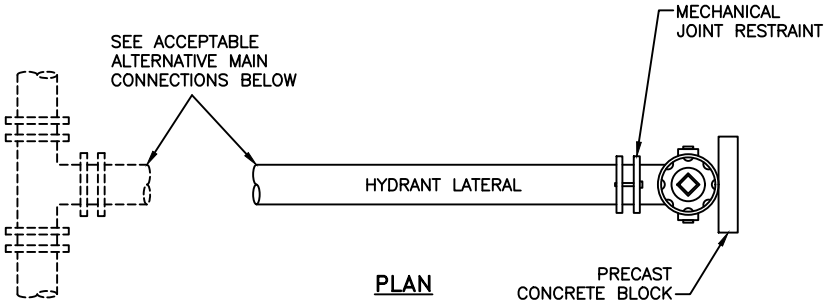

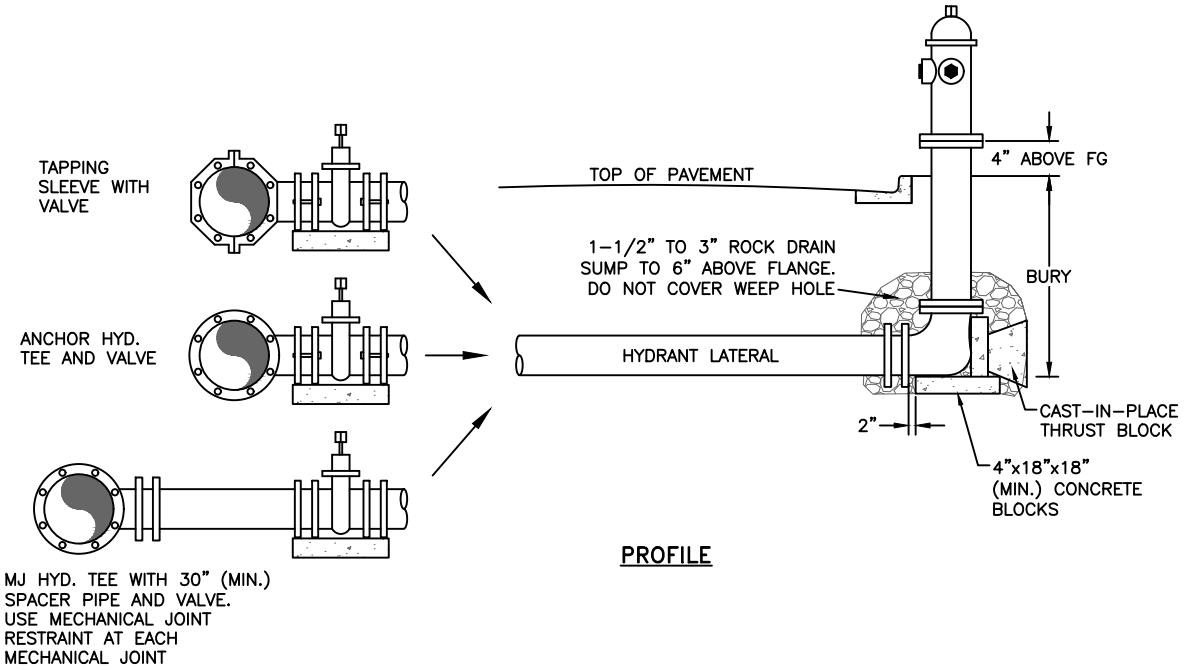

FIRE HYDRANT INSTALLATION

Drawn: IGL	Revised:	PAONIA COLORADO	W-2
Date: JANUARY 2026	Revised:		
Scale: N.T.S.	Revised:		

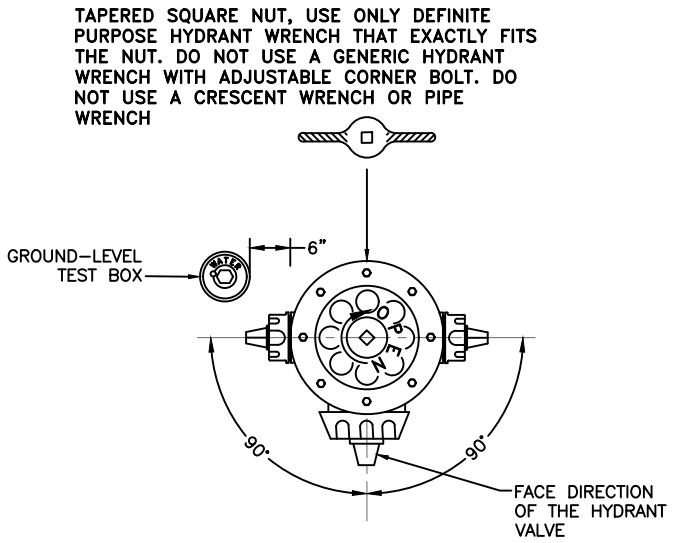

TOP (PLAN) VIEW

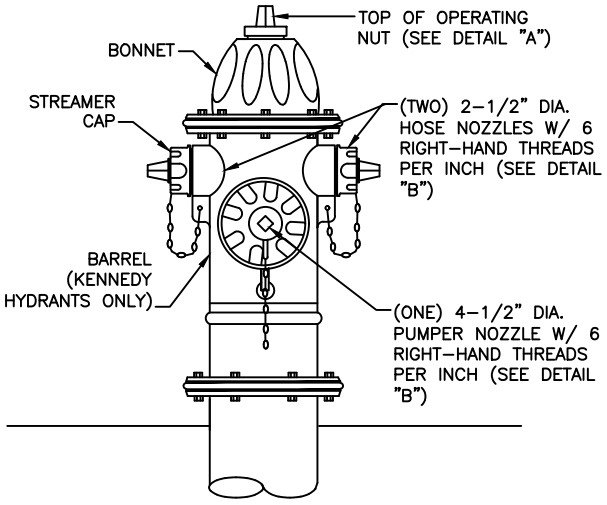

FACE VIEW

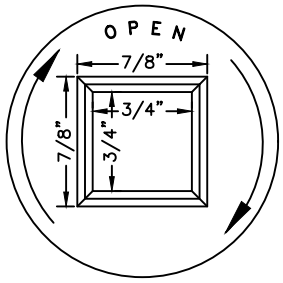

FACE (PLAN) VIEW

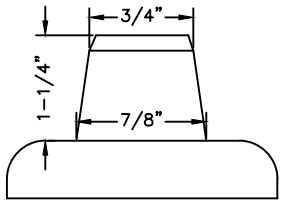

PROFILE

DETAIL "A" – OPERATING NUT

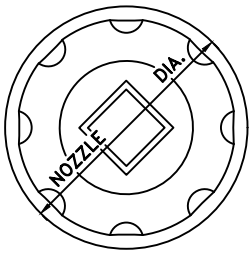

FACE VIEW

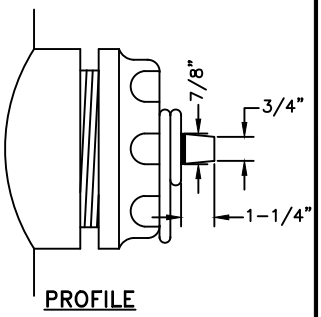

PROFILE

DETAIL "B" – NOZZLE DETAIL

FIRE HYDRANT SPECIFICATIONS

Drawn: IGL	Revised:	PAONIA COLORADO	W–3
Date: JANUARY 2026	Revised:		
Scale: N.T.S.	Revised:		

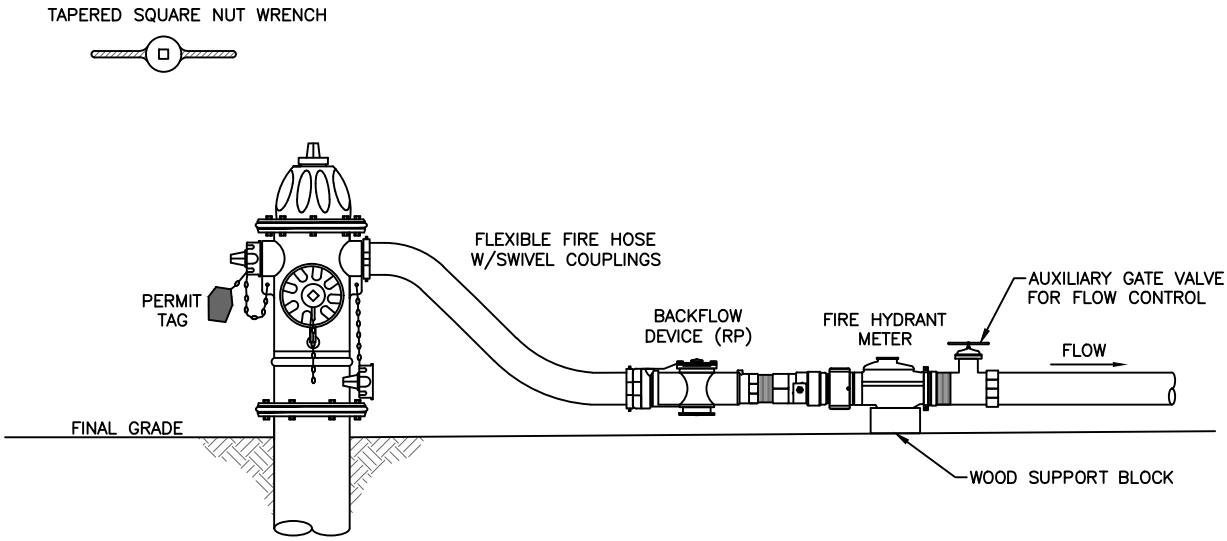

ASSEMBLY SEQUENCE

SCALE: N.T.S.

NOTES:

1. FLUSH HYDRANT BEFORE CONNECTING BACKFLOW AND METER CONFIGURATION.
2. HYDRANTS SHALL BE FULLY OPENED WHEN IN USE; DO NOT THROTTLE HYDRANT FLOW WITH THE HYDRANT STEM VALVE. FLOW SHALL BE CONTROLLED WITH THE OUTLET GATE VALVE ONLY.
3. WHERE BALL VALVES ARE PROVIDED FOR ISOLATION AND TESTING OF THE RP, THE HANDLE SHALL BE REMOVED FROM THE VALVES. THESE VALVES ARE ONLY TO BE USED IN SERVICING AND TESTING RP AND SHALL NOT BE USED TO CONTROL HYDRANT FLOWS, AND SHALL BE IN THE FULL OPEN POSITION AT ALL TIMES DURING HYDRANT FLOWS.
4. USE OF HYDRANT REQUIRES A PERMIT AND ADHERENCE TO ALL TERMS AND CONDITIONS OF THE PERMIT AND ASSOCIATED REQUIREMENTS. CONTACT THE TOWN, SEE WEBSITE FOR CONTACT INFORMATION.
5. USE OF A HYDRANT WITHOUT A BACKFLOW PREVENTION DEVICE IS IN VIOLATION OF THE TOWN'S CODE FOR CROSS–CONNECTION CONTROL. ALL HYDRANT CONNECTIONS REQUIRE A REDUCED PRESSURE PRINCIPLE BACKFLOW PREVENTER (RP) TYPE PER COLORADO PRIMARY DRINKING WATER REGULATION. KEEP THE RP CENTER DISCHARGE OUTLET AT LEAST 12 INCHES ABOVE GRADE.
6. CONTRACTOR SHALL USE A HYDRANT WRENCH WITH TAPERED, SQUARE BOX DESIGNED SPECIFICALLY FOR TOWN FIRE HYDRANTS TO OPERATE THE FIRE HYDRANT. NO OTHER TYPE OF WRENCH SHALL BE USED.
7. THE HYDRANT SHALL BE TESTABLE AND PROVIDED BY THE CONTRACTOR.

FIRE HYDRANT BACKFLOW AND METER CONFIGURATION

Drawn: IGL	Revised:	PAONIA COLORADO	W–4
Date: JANUARY 2026	Revised:		
Scale: N.T.S.	Revised:		

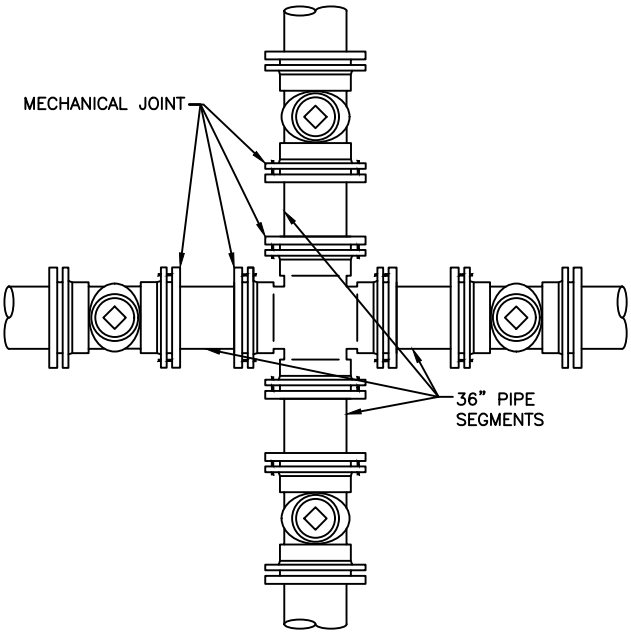

CROSS OR TEE W/ ANCHOR PIPES

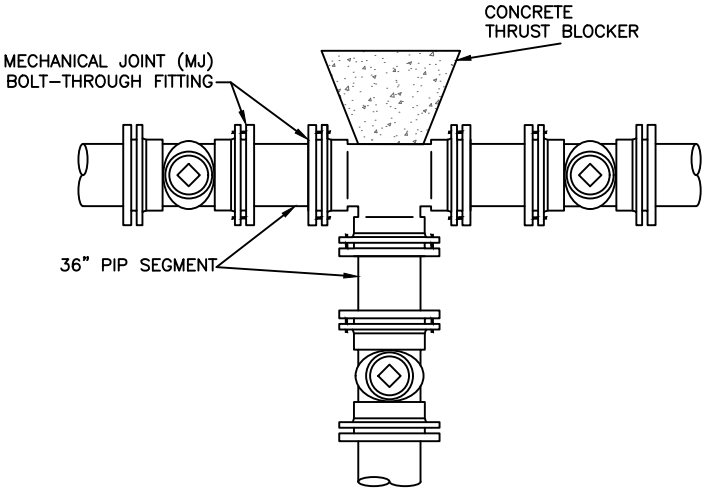

CROSS OR TEE W/ MJ Bolt-Through Fittings

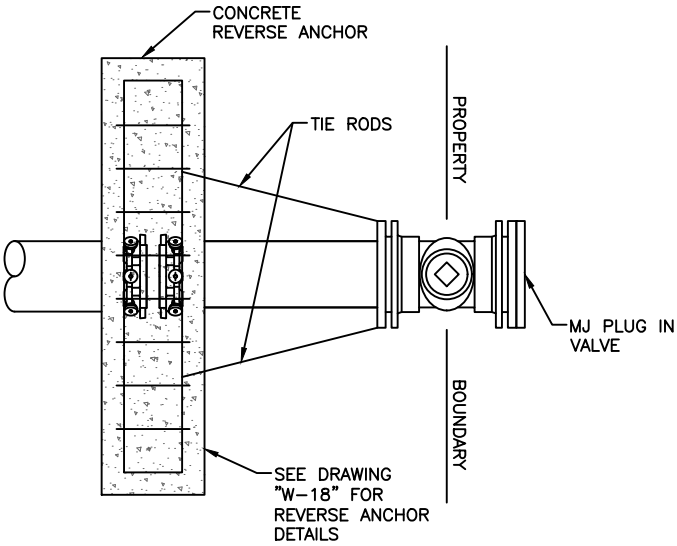

AT END-OF-LINE USE REVERSE ANCHOR WITH TIE BACK RODS

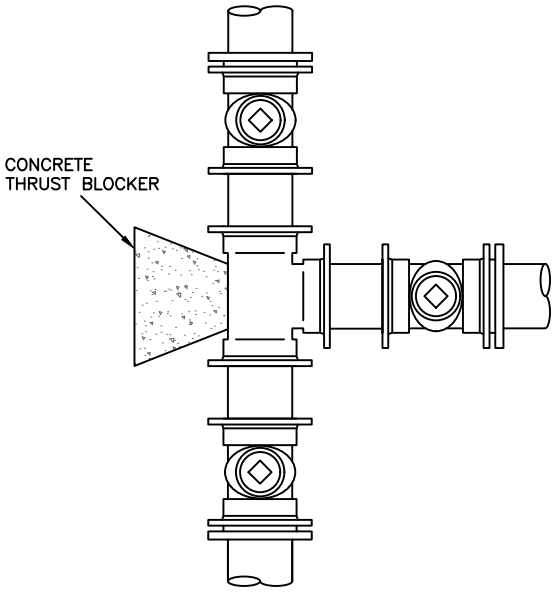

WITH MJ ANCHOR TEE

GENERAL NOTES:

1. ON ANY VALVE INSTALLATION NEAR A FITTING, THE VALVE SHALL BE ANCHORED BY RODS, REVERSE ANCHOR, AND MECHANICAL JOINT RESTRAINTS. 3/4" ALL-THREAD RODS SHALL BE USED WITH FIG. 7 BOLTS OR APPROVED DUCTILE TIE LUGS FOR DEAD-END VALVES AND/OR PLUGS. ALL METALLIC COMPONENTS SHALL BE WRAPPED IN POLYETHYLENE TUBING.
2. ANCHOR PIPE OR FOSTER COUPLINGS MAY BE SUBSTITUTED FOR SPACER PIPE AND RODS.
3. THE CONCRETE REVERSE ANCHORS USED SHALL BE SIZED AS INDICATED ON DRAWING "W-18".
4. SEE DRAWINGS "W-13" AND "W-28" FOR APPLICATION OF MECHANICAL JOINT RESTRAINTS.
5. SEE DRAWING "W-6" FOR VALVE BOX INSTALLATION.

VALVE INSTALLATION & LOCATION

Drawn: IGL	Revised:	PAONIA COLORADO	W-5
Date: JANUARY 2026	Revised:		
Scale: N.T.S.	Revised:		

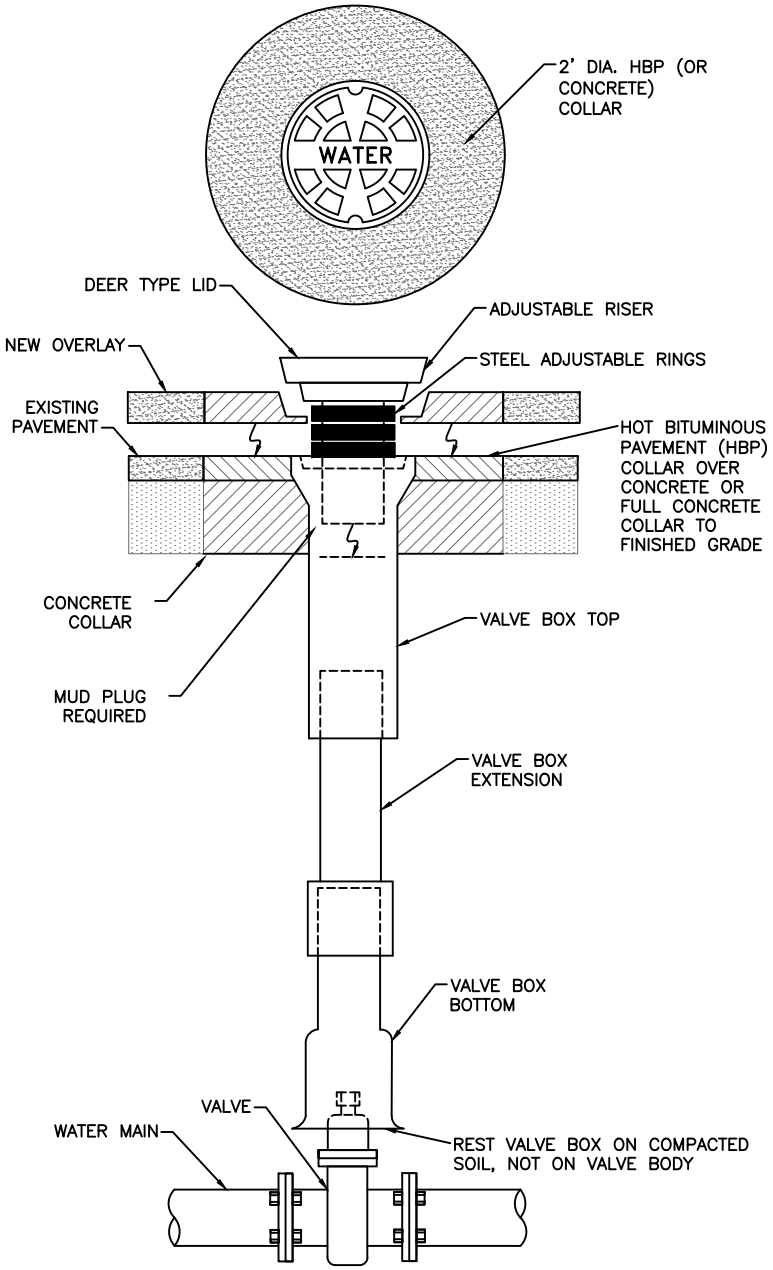

NOTES:

1. SLIP–TYPE 5–1/4" I.D. SHAFT TYLER PIPE SERIES 664–A OR EQUIVALENT, APPROVED BY THE TOWN.
2. MAIN AND FIRE HYDRANT VALVES AND VALVE BOXES SHALL BE LOCATED IN AND UNDER THE DRIVING SURFACE OF THE STREET, NOT IN THE CURB PAN, CURB, OR BEHIND THE CURB.
3. SEE DRAWING "W–10" FOR TRACER WIRE INSTALLATION AT VALVE BOXES.

VALVE BOX INSTALLATION

Drawn: IGL	Revised:	PAONIA COLORADO	W–6
Date: JANUARY 2026	Revised:		
Scale: N.T.S.	Revised:		

FIELD INSTALLATION OF POLYETHYLENE WRAP

STEP 1:

PLACE TUBE OF POLYETHYLENE MATERIAL ON PIPE PRIOR TO LOWERING IT INTO TRENCH.

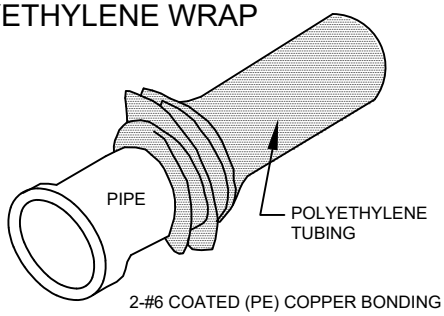

STEP 2:

PULL TUBE OVER THE LENGTH OF THE PIPE. TAPE TUBE TO END AT JOINT. FOLD MATERIAL AROUND THE ADJACENT SPIGOT END AND WRAP WITH TAPE TO HOLD THE PLASTIC TUBE IN PLACE. INSTALL BONDING STRAP OR WIRE AT EVERY JOINT OF PIPE PRIOR TO WRAPPING AS PER SECTION 7.10 OF THE STANDARD SPECIFICATIONS.

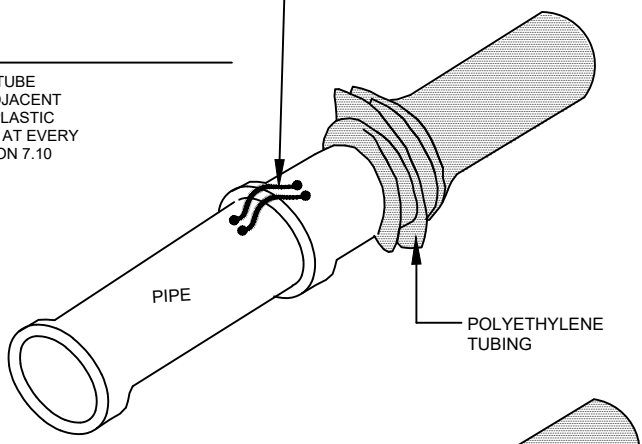

STEP 3:

OVERLAP FIRST TUBE WITH ADJACENT TUBE AND SECURE WITH PLASTIC ADHESIVE TAPE. THE POLYETHYLENE TUBE MATERIAL COVERING THE PIPE SHALL BE LOOSE. EXCESS MATERIAL SHALL BE NEATLY DRAWN UP AROUND THE PIPE BARREL, FOLDED ON TOP OF PIPE, AND TAPED IN PLACE.

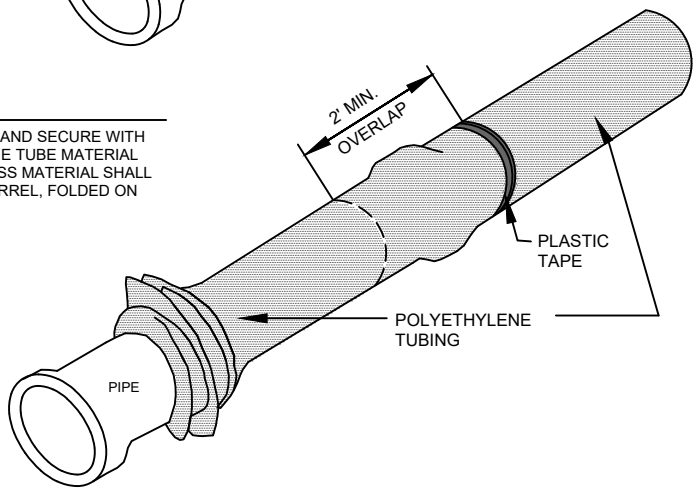

POLYETHYLENE WRAP

Drawn: IGL	Revised:	PAONIA COLORADO	W–7
Date: JANUARY 2026	Revised:		
Scale: N.T.S.	Revised:		

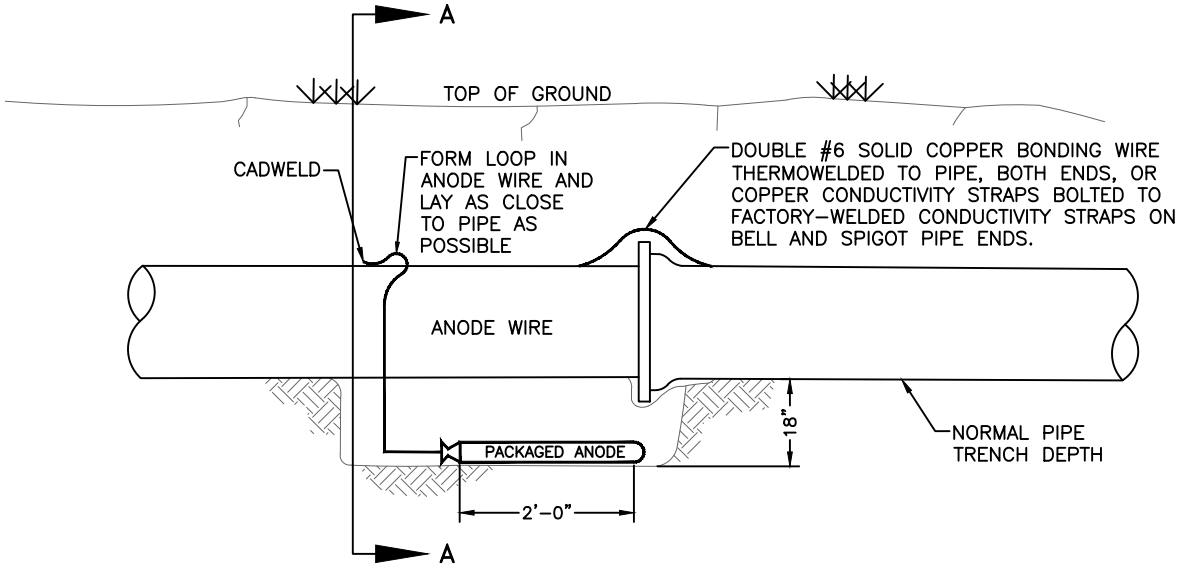

ELEVATION

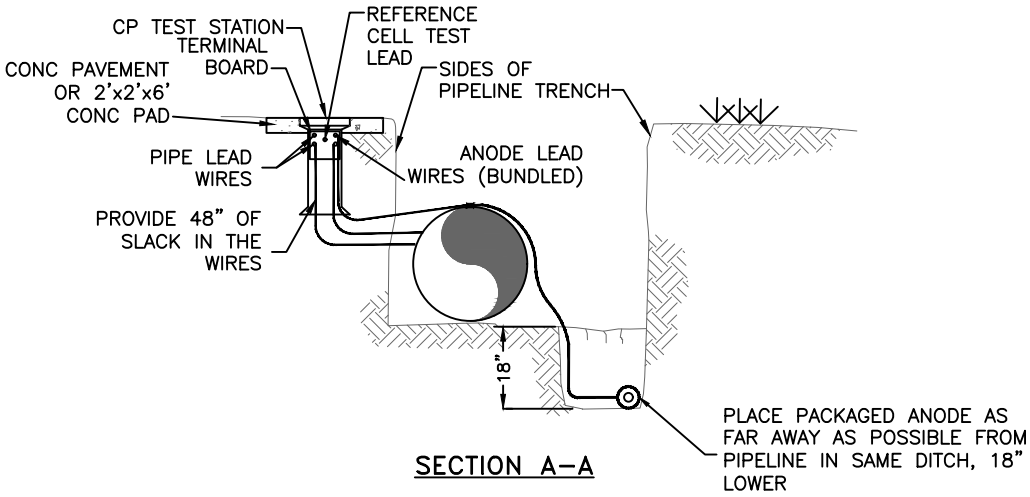

SECTION A-A

NOTES:

1. CADWELD CONNECTION TO BE PRIMED AND COATED CAREFULLY. PACKAGED ANODE SHOULD BE COVERED WITH FINE SOIL CONTAINING NO ROCKS OR DIRT CLUMPS, TAMPED.
2. WHEN ANODES ARE REQUIRED WITH METAL FITTINGS AND APPURTENANCES TOGETHER WITH PVC PIPE INSTALLATION, THE ANODES SHALL BE PLACED AND ATTACHED TO THE METAL IN SAME MANNER AS SHOWN ON THIS DRAWING. 9LB. ANODES CAN BE USED ON METAL FITTINGS 12" AND LESS IN DIAMETER AND 17LB. ANODES FOR METAL FITTINGS GREATER THAN 12" DIAMETER WHEN USING PVC PIPE.
3. PACKAGED ANODE TO BE WETTED AND COVERED WITH SOIL PRIOR TO BACKFILLING.

BONDING JOINT & ANODE INSTALLATION

Drawn: IGL	Revised:	PAONIA COLORADO	W-8
Date: JANUARY 2026	Revised:		
Scale: N.T.S.	Revised:		

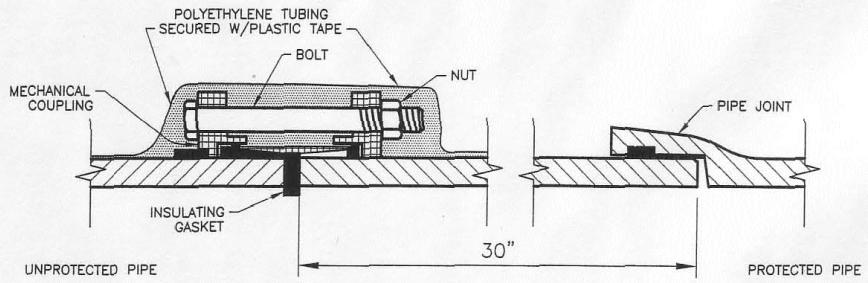

INSULATED MECHANICAL COUPLING

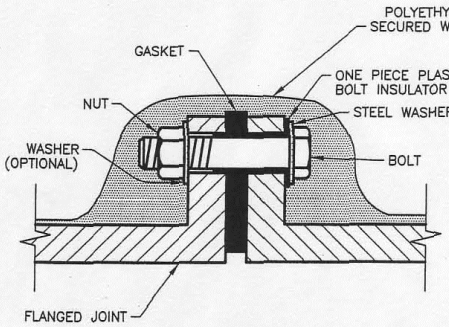

INSULATED FLANGE JOINT

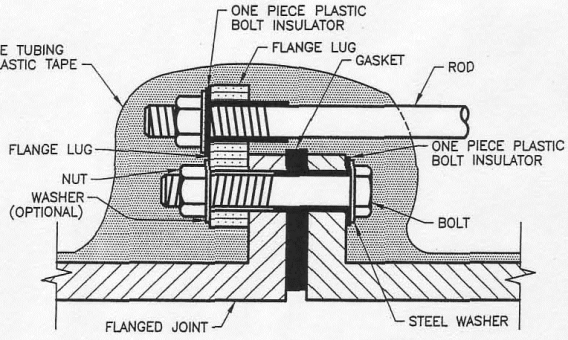

INSULATED TIE BACK ROD

NOTE:
TEST WIRES TO BE USED WHEN REQUIRED.

INSULATOR INSTALLATION

Drawn: IGL	Revised:	PAONIA COLORADO	W–9
Date: JANUARY 2026	Revised:		
Scale: N.T.S.	Revised:		

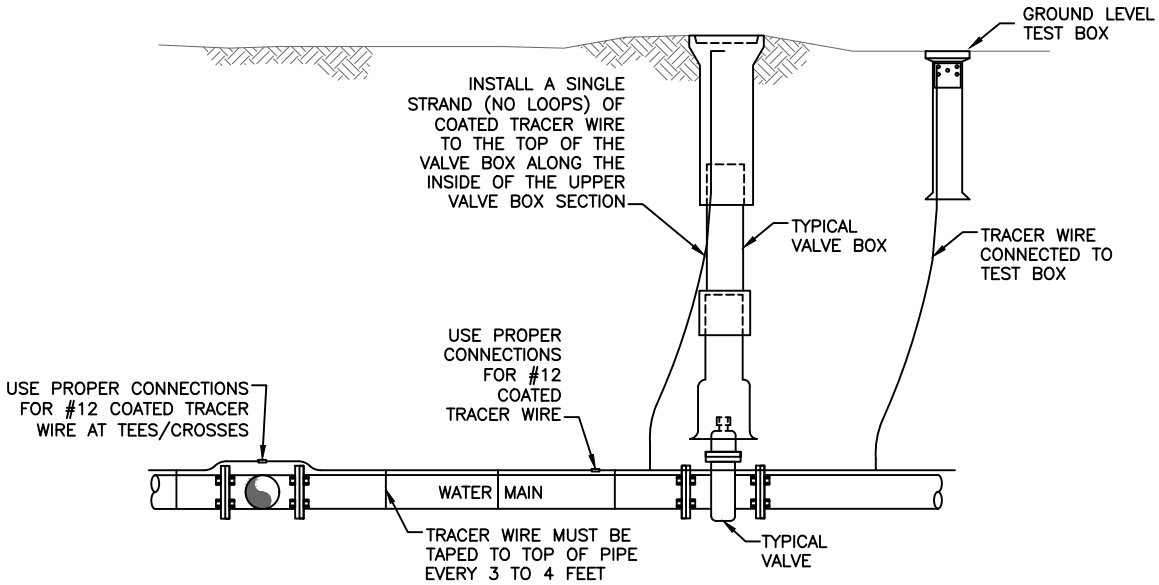

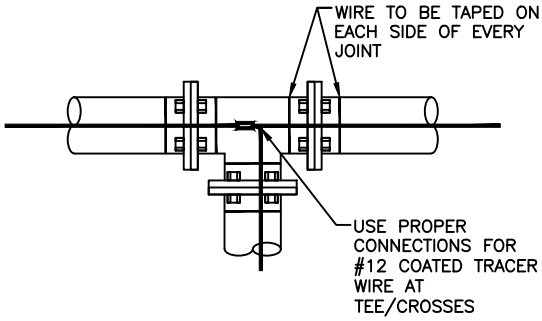

GENERAL: HOUSING IS TO PROTECT SPLIT BOLT WIRE NUT AND TRACER WIRE IN BURIED APPLICATIONS.

SPECIFICATIONS: HOUSING SHALL BE MADE OF HIGH IMPACT POLYPROPYLENE AND BE FILED WITH A DIELECTRIC SILICONE GEL.

AQUA HOUSING 69105:
- MAX VOLTAGE: 50V
- HOUSING: HIGH IMPACT POLYPROPYLENE
- SEALANT: DIELECTRIC SILICONE GEL
- WIRE RANGE: #14–10 SOLID COPPER; #14–10 STEEL CORE TRACER WIRE
- SPLIT BOLT SIZE NOT TO EXCEED 1.0" TALL BY 0.8" WIDE BY 0.7" DEEP

VISILOCK HOUSING 98010

MAX VOLTAGE: 100V
TEMPERATURE RATING: –40°C –90°C (194°F)
MEASUREMENTS: SEE SPECIFICATION SHEET FOR COMPLETE PRODUCT MEASUREMENTS
WIRE RANGE:
- #8–1/0 (.363"–.625" O.D.)
- #12–#4 (.305"–.443 O.D.)

AMPERAGE NOT TO EXCEED MAXIMUM TEMPERATURE OF THE CONDUCTOR

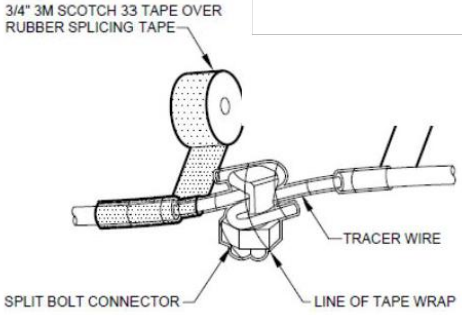

SPLIT BOLT TAPING

1. Wrap all Tracer Wire split bolt connectors or exposed wire using 1" 3M Scotch 130C Linerless Rubber Splicing Tape making sure to seal all ends to prevent moisture penetration.

TRACER WIRE INSTALLATION DETAILS

Drawn: IGL	Revised:	PAONIA COLORADO	W–10
Date: JANUARY 2026	Revised:		
Scale: N.T.S.	Revised:		

THRUST BLOCK DIMENSIONS & VOLUMES – PVC & DIP 250 psi

MAIN SIZE (IN.)	TYPE OF FITTING	MINIMUM BEARING SURFACE AREA (ft^2)	MINIMUM A_x (ft)	MINIMUM A_y (ft)	MINIMUM C_x (ft)	MINIMUM C_y (ft)	MINIMUM B	APPROXIMATE VOLUME (yd^3)
4	11.25° BEND	1.00	1.00	1.00	0.25	0.33	2.00	0.25
4	22.5° BEND	2.00	2.00	1.41	0.21	0.33	22.00	0.25
4	45° BEND	3.50	3.50	1.87	0.42	0.33	2.00	0.25
4	TEE & DEAD END	4.75	4.75	2.18	0.67	0.33	4.75	0.25
6	11.25° BEND	2.00	2.00	1.41	0.25	0.50	2.00	0.25
6	22.5° BEND	3.75	3.75	1.94	0.38	0.50	2.00	0.25
6	45° BEND	7.25	7.25	2.69	0.58	0.50	2.00	0.25
6	TEE & DEAD END	9.50	9.50	3.08	0.83	0.50	2.00	0.50
8	11.25° BEND	3.25	3.25	1.80	0.34	0.67	2.00	0.25
8	22.5° BEND	6.50	6.50	2.55	0.48	0.67	2.00	0.25
8	45° BEND	12.50	12.50	3.57	0.67	0.67	2.00	0.50
8	TEE & DEAD END	16.25	16.25	4.64	1.08	0.67	2.00	0.75

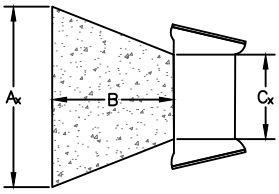

THRUST BLOCK DIMENSIONS & VOLUMES – DIP (Maximum Static Pressure = 250 psi)

MAIN SIZE (IN.)	TYPE OF FITTING	MINIMUM BEARING SURFACE AREA (ft^2)	MINIMUM A_x (ft)	MINIMUM A_y (ft)	MINIMUM C_x (ft)	MINIMUM C_y (ft)	MINIMUM B	APPROXIMATE VOLUME (yd^3)
12	11.25° BEND	6.75	2.60	2.60	0.43	1.00	2.00	0.50
12	22.5° BEND	13.50	3.69	3.66	0.64	1.00	2.00	0.50
12	45° BEND	26.25	7.17	3.66	1.00	1.00	3.09	1.50
12	TEE & DEAD END	34.25	9.36	3.66	1.46	1.00	3.95	2.25
16	11.25° BEND	11.75	3.43	3.43	0.44	1.33	2.00	0.50
16	22.5° BEND	23.25	6.20	3.75	0.66	1.33	2.77	1.00
16	45° BEND	45.50	12.13	3.75	1.00	1.33	5.57	4.00
16	TEE & DEAD END	59.50	15.87	3.75	1.92	1.33	6.98	6.50

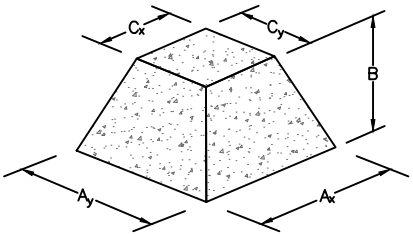

NOTES:

1. THE MINIMUM BEARING SURFACE AREAS SHOWN ARE BASED ON A MAX STATIC PIPE PRESSURE OF 250 POUNDS PER SQUARE INCH PLUS A SAFETY FACTOR OF 1.5 AND AN ALLOWABLE SOIL BEARING CAPACITY OF 1,500 POUNDS PER SQUARE FOOT. BEARING SURFACE AREA IS ROUNDED UP TO THE NEAREST 0.25 SQUARE FEET. REFERENCE AWWA M–23 AND M–41.
2. THE DESIGN ENGINEER IS RESPONSIBLE FOR VERIFYING ASSUMPTIONS BASED ON ACTUAL SITE CONDITIONS. IF SITE CONDITIONS VARY FROM THE ASSUMPTIONS, THE DESIGN ENGINEER SHALL PROVIDE A SITE–SPECIFIC DESIGN IN ACCORDANCE WITH AWWA M–23, PVC PIPE – DESIGN AND INSTALLATION AND AWWA M–41, DUCTILE–IRON PIPE AND FITTINGS. SITE–SPECIFIC DESIGNS INCLUDING GEOTECHNICAL INFORMATION SHALL BE SUBMITTED TO THE TOWN FOR REVIEW.
3. THE MINIMUM BEARING SURFACE AREA AND APPROXIMATE VOLUME OF CONCRETE SHALL BE SHOWN ON THE CONSTRUCTION PLANS FOR ALL CONCRETE THRUST BLOCKS. SEE SECTION 9.4 FOR CONCRETE REQUIREMENTS. SEE SECTION 4.8 FOR THRUST BLOCK REQUIREMENTS.
4. THE APPROXIMATE VOLUMES SHOWN ARE BASED ON THE MINIMUM BEARING SURFACE AREA AND THE MINIMUM TRENCH DIMENSIONS. THE APPROXIMATE VOLUME IS ROUNDED UP TO THE NEAREST 0.25 CUBIC YARDS.
5. THESE CHARTS MAY ONLY BE USED IF THE BLOCK HEIGHT (Ay) IS EQUAL TO OR LESS THAN ONE–HALF THE TOTAL DEPTH (Ht) FROM THE FINISHED GRADE TO THE BOTTOM OF THE BLOCK. THE MINIMUM DIMENSIONS SHOWN ARE BASED ON A PIPE DEPTH OF 5.5 FEET.
6. A SITE–SPECIFIC DESIGN SHALL BE REQUIRED FOR PIPES LARGER THAN 16 INCHES OR MAX STATIC PIPE PRESSURES GREATER THAN 250 POUNDS PER SQUARE INCH. THE DESIGN ENGINEER HAS THE OPTION OF PROVIDING A SITE–SPECIFIC DESIGN FOR PIPES SMALLER THAN 16 INCHES OR MAX STATIC PRESSURES LESS THAN 250 POUNDS PER SQUARE INCH.
7. ALL CALCULATIONS SHALL BE PROVIDED TO THE TOWN FOR REVIEW.

THRUST BLOCK DATA

Drawn: IGL	Revised:	PAONIA COLORADO	W–11
Date: JANUARY 2026	Revised:		
Scale: N.T.S.	Revised:		

CONCRETE THRUST BLOCKS

WATER MAIN AND TAP SIZE COMBINATIONS WHICH REQUIRE A CONCRETE THRUST REACTION BLOCK BEHIND THE MAIN AT THE TAPPING SLEEVE OR SADDLE.

ALL WATER MAINS

■ INDICATES CONCRETE THRUST BLOCK REQUIRED

MAIN SIZE (INCHES)

TAP SIZE (INCHES)	4	6	8	10	12	14	16	18	20	22	24	26	28	30	36	42
4	■	■	■	■	■	■										
6		■	■	■	■	■	■	■	■							
8			■	■	■	■	■	■	■	■	■					
10				■	■	■	■	■	■	■	■	■	■	■		
12					■	■	■	■	■	■	■	■	■	■	■	
14						■	■	■	■	■	■	■	■	■	■	■
16							■	■	■	■	■	■	■	■	■	■
18								■	■	■	■	■	■	■	■	■
20									■	■	■	■	■	■	■	■
22										■	■	■	■	■	■	■
24											■	■	■	■	■	■

ANY THRUST REACTION BLOCK REQUIREMENTS FOR WATER MAIN AND TAP SIZE COMBINATIONS OTHER THAN THOSE SHOWN ABOVE WILL REQUIRE SPECIAL DESIGN APPROVAL BY THE TOWN.

THRUST BLOCKS REQUIRED FOR TAPS

Drawn: IGL	Revised:	PAONIA COLORADO	W–12
Date: JANUARY 2026	Revised:		
Scale: N.T.S.	Revised:		

PIPE DIAMETER	L = MINIMUM RESTRAINED PIPE LENGTH											
	45° BEND			22-1/2° BEND			11-1/4° BEND			DEAD-END VALVE OR PLUG, TO INCLUDE INLINE VALVES (SEE NOTE 7)		
MAX. STATIC PRESSURE (PSI)	<100	100-150	150-200	<100	100-150	150-200	<100	100-150	150-200	<100	100-150	150-200
6-INCH DUCTILE IRON AND PVC	6	9	12	3	5	6	2	3	3	49	73	97
8-INCH DUCTILE IRON AND PVC	8	12	16	4	6	8	2	3	4	63	94	125
12-INCH DUCTILE IRON AND PVC	12	17	23	6	8	11	3	4	6	89	133	177
16-INCH DUCTILE IRON AND PVC	15	22	29	7	11	14	4	5	7	USE CONCRETE REVERSE ANCHOR	USE CONCRETE REVERSE ANCHOR	USE CONCRETE REVERSE ANCHOR
20-INCH DUCTILE IRON AND PVC	18	26	35	9	13	17	4	6	8			
24-INCH DUCTILE IRON AND PVC	20	30	40	10	15	20	5	7	10			
30-INCH DUCTILE IRON AND PVC	24	36	48	12	18	24	6	9	12			
36-INCH DUCTILE IRON AND PVC	28	42	56	14	20	27	7	10	14			

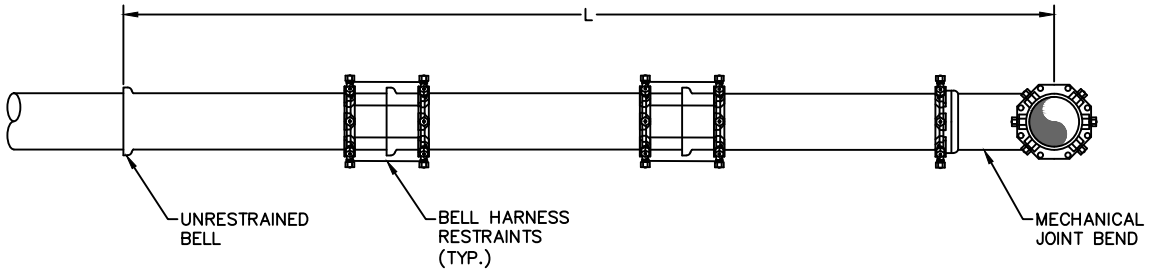

NOTES:

1. PRESSURE GREATER THAN 200 PSI REQUIRES SPECIAL DESIGN APPROVED BY THE TOWN.
2. LENGTH IS BASED ON MINIMUM 5 FEET OF GROUND COVER AND COMPACTED SOIL. IF THE DEPTH IS LESS THAN 5 FEET, RESTRAINED LENGTH MUST BE DESIGNED BY THE DESIGN ENGINEER.
3. RESTRAINED PIPE LENGTH APPLIES TO CONDITION WHERE NO CONCRETE THRUST REACTION BLOCK IS PRESENT.
4. CALCULATIONS ARE BASED ON POORLY-GRADED SANDS, GRAVEL, AND GRAVEL-SAND MIXTURE, LITTLE OR NO FINES, TYPE 4 BEDDING CONDITIONS – "PIPE BEDDED IN SAND, GRAVEL, OR CRUSHED STONE TO A DEPTH OF 1/8 PIPE DIAMETER (4" MIN.)." FACTOR OF SAFETY 2:1.
5. FIGURES ARE BASED ON DIP WRAPPED IN POLYETHYLENE MATERIAL.
6. USE CRA FOR DOWN-TURNING BENDS.
7. RESTRAINED LENGTH FOR DEAD END MAY BE USED AT THE DISCRETION OF THE TOWN.

RESTRAINED PIPE LENGTH (FT) W/ MECHANICAL JOINT RESTRAINTS

Drawn: IGL	Revised:	PAONIA COLORADO
Date: JANUARY 2026	Revised:	W-13
Scale: N.T.S.	Revised:	

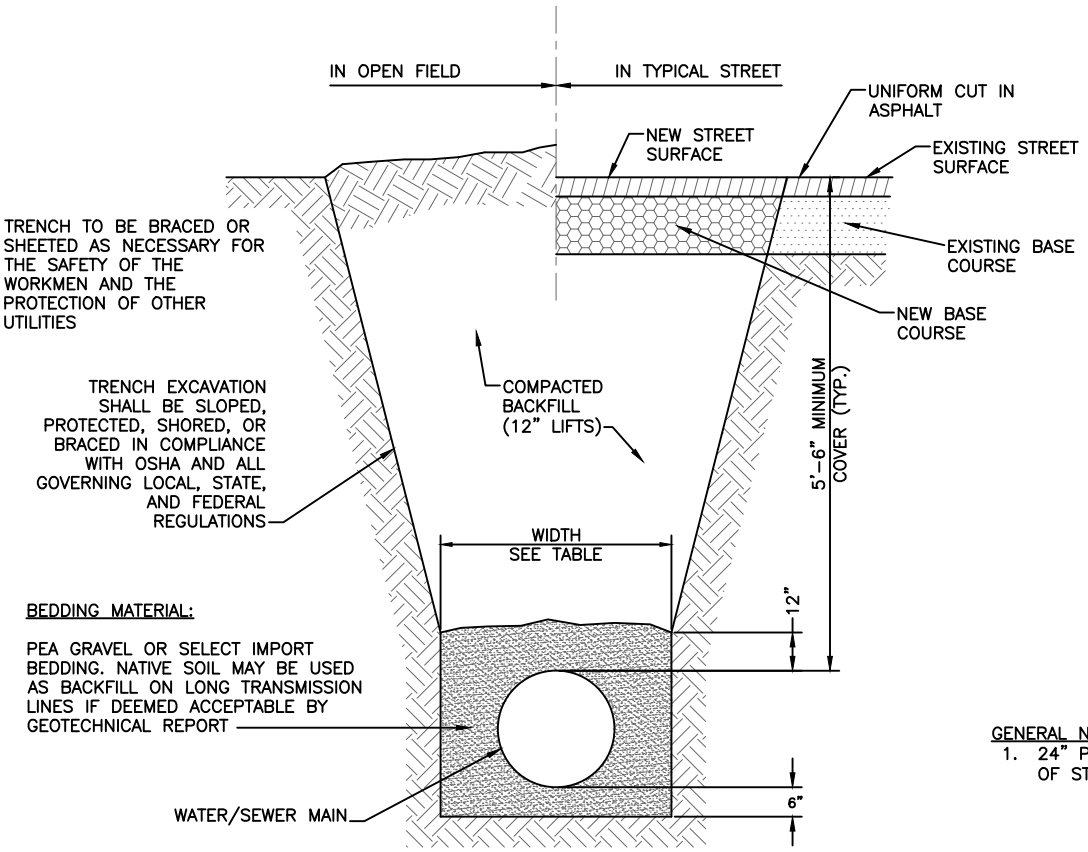

TYPICAL TRENCH SECTION
SCALE: N.T.S.

GENERAL NOTE:
1. 24" PIPES NEED 8" TO 10" OF STABILIZATION

PIPE DIAMETER	MINIMUM WIDTH	MAXIMUM WIDTH
4"	2'-2"	3'-0"
6"	2'-2"	3'-0"
8"	2'-2"	3'-0"
10"	2'-4"	3'-0"
12"	2'-6"	3'-6"
18"	2'-10"	3'-9"
24"	3'-2"	4'-3"

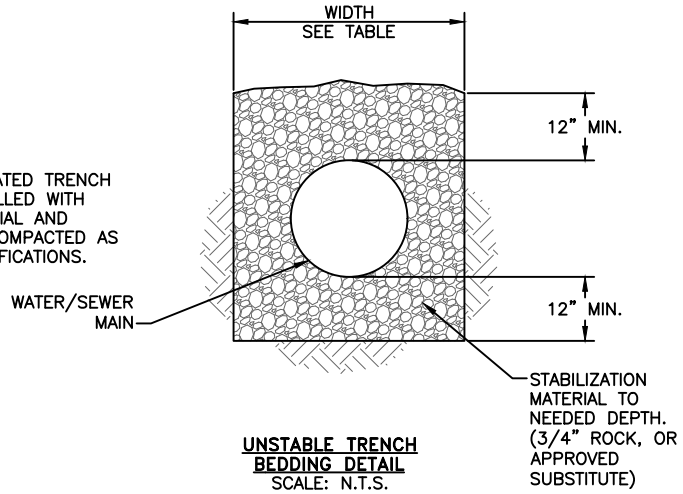

UNSTABLE TRENCH BEDDING DETAIL
SCALE: N.T.S.

TYPICAL TRENCH CROSS-SECTION

Drawn: IGL	Revised:	PAONIA COLORADO	W-14
Date: JANUARY 2026	Revised:		
Scale: N.T.S.	Revised:		

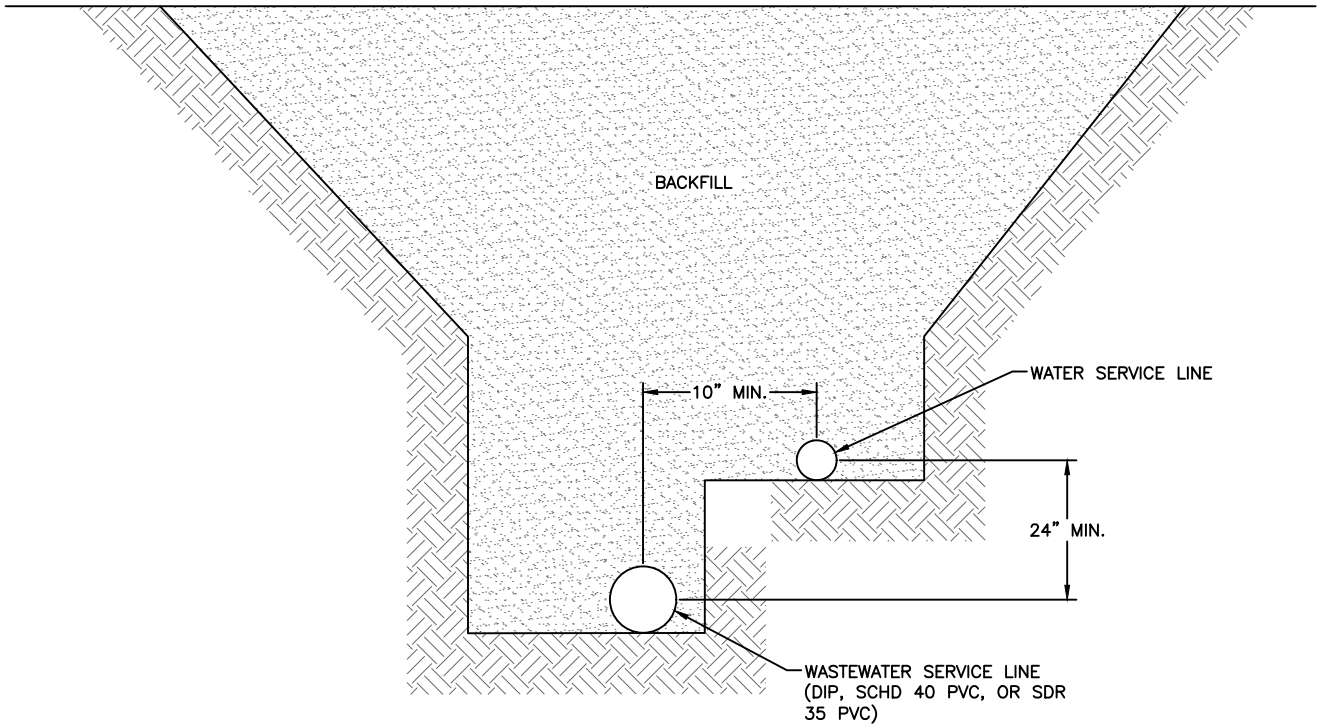

TYPICAL COMMON SERVICE TRENCH SECTION

Drawn: IGL	Revised:	PAONIA COLORADO	W–15
Date: JANUARY 2026	Revised:		
Scale: N.T.S.	Revised:		

PAGE LEFT BLANK INTENTIONALLY
FOR SHEET W-16

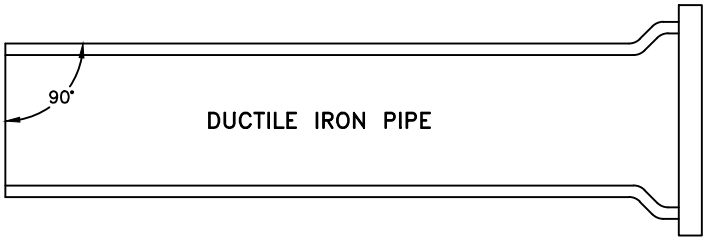

MECHANICAL JOINT CONNECTION

PIPE MUST BE CUT AT RIGHT ANGLES TO LONGITUDINAL CENTERLINE IN ALL CASES.

PIPE ENDS SHALL BE FREE OF BURRS.

MORTAR LINING SHALL BE FLUSH WITH PIPE END.

GOUGES CUT IN PIPE ENDS SHALL NOT BE ALLOWED.

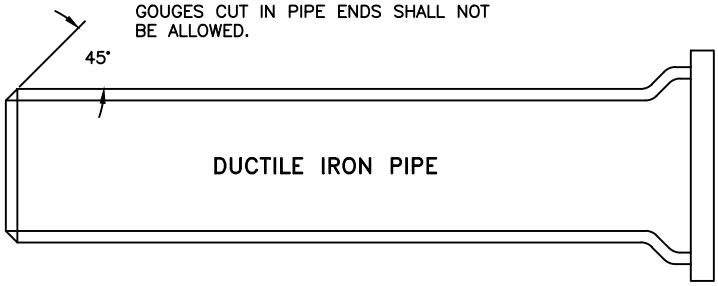

SLIP JOINT CONNECTION

PIPE CUT IN STRAIGHT LINE AND BEVELED AT 45° ANGLE ON END.

GENERAL NOTES:

1. ALL PIPE CUTTING EQUIPMENT AND PIPE CUTS MUST BE APPROVED BY THE TOWN INSPECTOR.
2. ALL PIPE ENDS TO BE USED IN INSTALLATION SHALL BE DRESSED SMOOTH TO THE SATISFACTION OF THE INSPECTOR PRIOR TO INSTALLATION.
3. AT THE REQUEST OF THE CONTRACTOR MAKING THE INSTALLATION, THE TOWN WILL MAKE PIPE CUTS, PROVIDED THE CURRENT FEE PER CUT IS PAID AND 24-HOUR NOTICE IS GIVEN (THE CURRENT FEE IS SUBJECT TO CHANGE.)
4. ALL DIP DELIVERED TO JOB SITE MUST BE NEW MATERIAL.

PIPE CUTTING

Drawn: IGL	Revised:	PAONIA COLORADO	W-17
Date: JANUARY 2026	Revised:		
Scale: N.T.S.	Revised:		

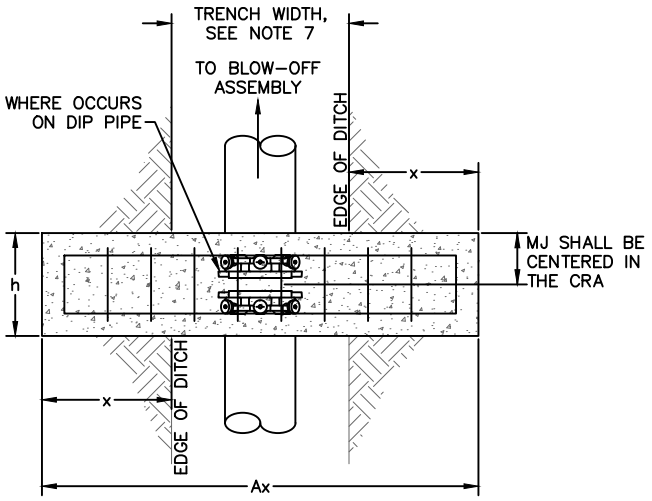

PLAN
DEAD-END OR REVERSE ANCHOR

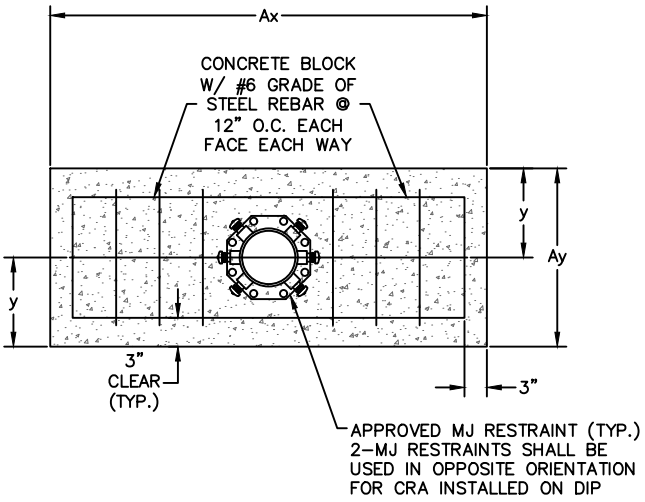

ELEVATION
DEAD-END OR REVERSE ANCHOR

DIAMETER (in)	PRESSURE (psi)	x (in)	Ax (in)	y (in)	Ay (in)	Ab (sf)	h (in)	Vol (cy)
4	250	12	72	12	28.80	6.80	18	1.0
6	250	18	84	12	30.90	9.73	18	1.0
8	250	36	120	12	33.05	18.53	18	1.5
12	170	36	120	15	43.20	24.60	18	2.0
12	250	48	144	18	49.20	36.80	24	3.75
16	170	54	156	18	53.40	44.05	24	4.25
16	250	60	168	24	65.40	60.50	36	8.5

NOTES:

1. THE MINIMUM BEARING SURFACE AREAS SHOWN ARE BASED ON A MAX. STATIC PIPE PRESSURE OF 170/250 POUNDS PER SQUARE INCH PLUS A SAFETY FACTOR OF 1.5, AND AN ALLOWABLE SOIL BEARING CAPACITY OF 1,500 POUNDS PER SQUARE FOOT. FOR HDPE, ADDITIONAL ASSUMPTIONS INCLUDE A MAX 50°F TEMPERATURE CHANGE AND A POISSON RATIO OF 0.45. REFERENCE AWWA M-23, M-41, AND M-55.
2. THE DESIGN ENGINEER IS RESPONSIBLE FOR VERIFYING ASSUMPTIONS BASED ON ACTUAL SITE CONDITIONS. IF SITE VARIES FROM THE ASSUMPTIONS, THE DESIGN ENGINEER SHALL PROVIDE A SITE-SPECIFIC DESIGN THAT SHALL BE IN ACCORDANCE WITH AWWA M-23, PVC PIPE DESIGN AND INSTALLATION, AND AWWA M-41, DUCTILE IRON PIPE, AND FITTINGS. SITE-SPECIFIC DESIGNS USING GEOTECHNICAL INFORMATION SHALL BE SUBMITTED TO THE TOWN FOR APPROVAL.
3. THE MINIMUM LATERAL BEARING SURFACE AREA (Ab) AND APPROXIMATE VOLUME OF CONCRETE (Vol) SHALL BE SHOWN ON THE CONSTRUCTION PLANS FOR ALL CONCRETE REVERSE ANCHORS.
4. THE APPROXIMATE VOLUMES SHOWN ARE BASED ON THE MINIMUM DIMENSIONS IN THE TABLE. THE APPROXIMATE VOLUME IS ROUNDED UP TO THE NEAREST 0.25 CUBIC YARDS.
5. A SITE-SPECIFIC DESIGN SHALL BE REQUIRED FOR PIPES LARGER THAN 16 INCHES OR MAX. STATIC PIPE PRESSURES GREATER THAN 250 POUNDS PER SQUARE INCH. THE DESIGN ENGINEER HAS THE OPTION OF PROVIDING A SITE-SPECIFIC DESIGN FOR PIPES SMALLER THAN 16 INCHES OR MAX. STATIC PRESSURES LESS THAN THE PRESSURE LISTED IN THE TABLE.
6. COAT RODS WITH EPOXY POLYAMIDE COATING, 10 MILS THICK, MIN.
7. A TRENCH WIDTH OF 4 FEET AND 6" BEDDING UNDER THE PIPE ARE ASSUMED FOR BEARING CALCULATIONS, (Ax, Ay, AND y).
8. THE DESIGN ENGINEER SHALL ENSURE THE CONSTRUCTION OF THE CONCRETE REVERSE ANCHOR SHALL NOT CONFLICT WITH OTHER UTILITIES.
9. DUCTILE IRON FITTINGS AND PIPE SHALL BE WRAPPED IN POLYETHYLENE TUBING WHERE ADJACENT TO CONCRETE.

CONCRETE REVERSE ANCHOR FOR MECHANICAL JOINT RESTRAINTS

Drawn: IGL	Revised:	PAONIA COLORADO	W-18
Date: JANUARY 2026	Revised:		
Scale: N.T.S.	Revised:		

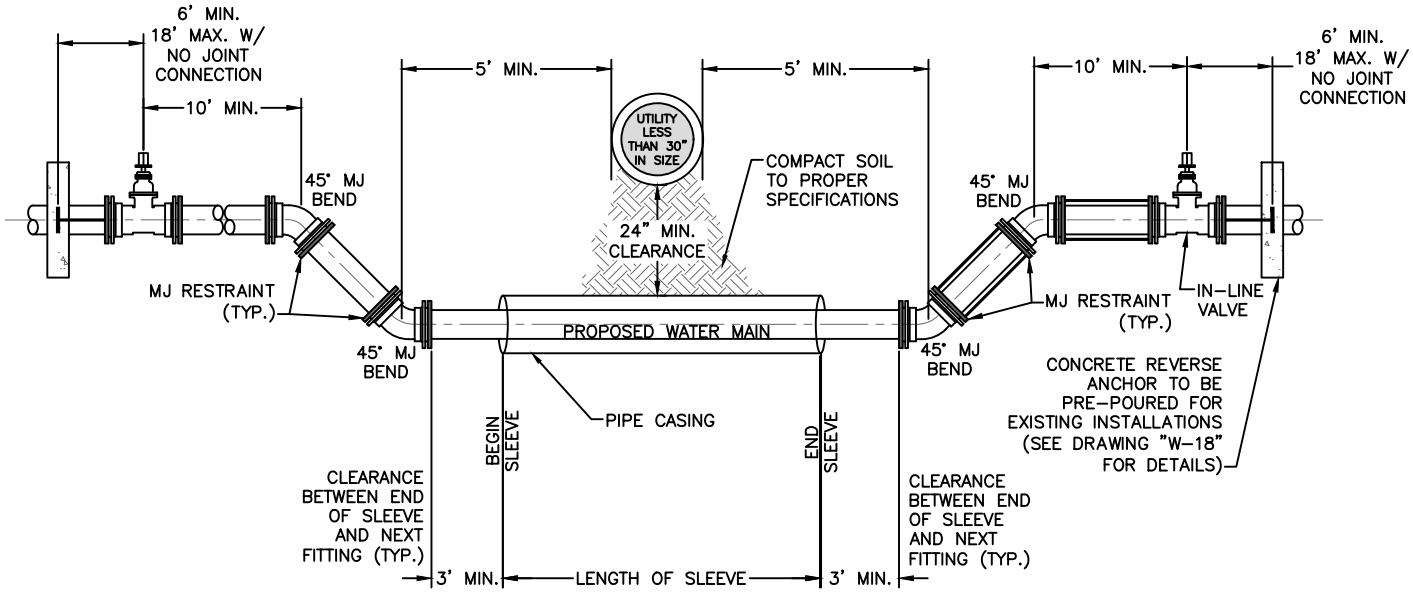

NOTES:

1. ALL DUCTILE IRON FITTINGS AND PIPE SHALL BE CATHODICALLY PROTECTED.
2. ALL FITTINGS SHALL HAVE MJ RESTRAINTS.
3. EXAMPLE CAN VARY DUE TO SITE CONDITIONS AND DISTRICT INSPECTOR'S DIRECTION.
4. RESTRAINED JOINTS ARE REQUIRED WITHIN LOWERING.
5. NO TAPS OR TEES ARE ALLOWED WITHIN THE LOWERING.

LOWERING DETAIL – UTILITY CROSSING 30" & SMALLER

Drawn: IGL	Revised:	PAONIA COLORADO	W–19
Date: JANUARY 2026	Revised:		
Scale: N.T.S.	Revised:		

LOWERING DETAIL W/CASING UTILITY CROSSING GREATER THAN 30"

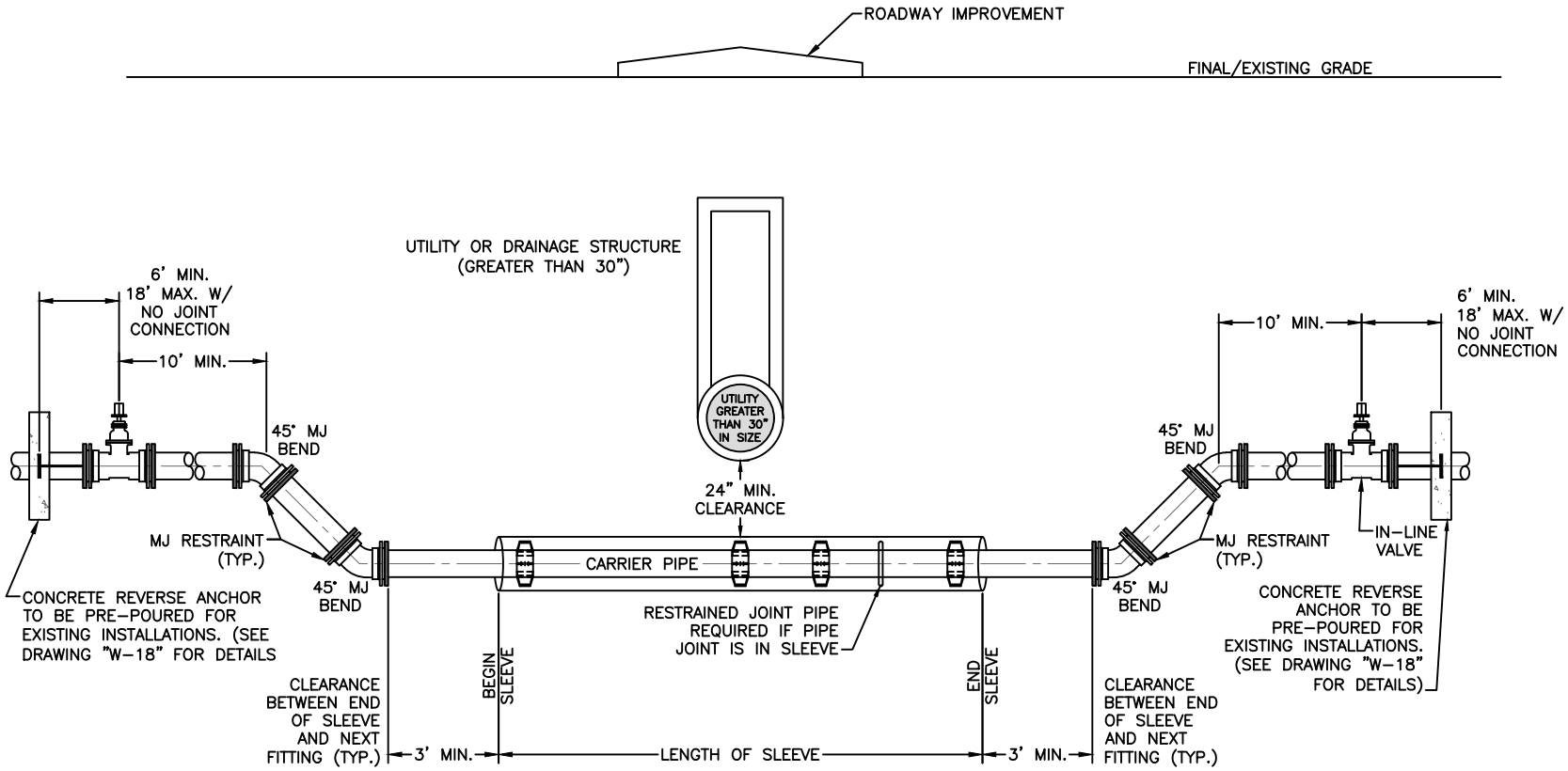

NOTES:

1. 3/4" ALL-THREAD TO BE USED FROM VALVE TO REVERSE ANCHOR AND FROM UPPER BEND TO VALVE.
2. IF A JOINT IS LOCATED BETWEEN ANY FITTINGS INCORPORATED INTO THE LOWERING, BELL/JOINT RESTRAINTS MUST BE USED.
3. CASING PIPE MUST BE CLEAN AND FREE OF ALL DIRT AND DEBRIS BEFORE INSTALLING CARRIER PIPE AND BEFORE INSTALLING END SEALS.
4. CARRIER PIPE SHALL BE DIP, UNLESS OTHERWISE APPROVED.
5. FURNISH AND INSTALL JOINT BONDING, POLYETHYLENE TUBING, AND 17 LB. MAGNESIUM ANODE ON DIP LOWERING PER STANDARD SPECIFICATIONS.
6. FURNISH AND INSTALL ONE 17 LB. MAGNESIUM ANODE PER 20 FEET OR LESS OF CASING PIPE.
7. ENTIRE LENGTH OF LOWERING (FROM VERTICAL BEND TO LOWER VERTICAL BEND) SHALL REST ON 18" MINIMUM OF 3/4" ROCK BELOW CASING AND UP TO SPRINGLINE OF CASING AND CARRIER PIPE.

Drawn: IGL
Date: JANUARY 2026
Scale: N.T.S.
Revised:
Revised:
Revised:

PAONIA COLORADO

W-20

PAGE LEFT BLANK INTENTIONALLY
FOR SHEET W-21

NOTE:
USE DETAIL "B" WHEN INSTALLING TO PAVEMENT ELEVATION

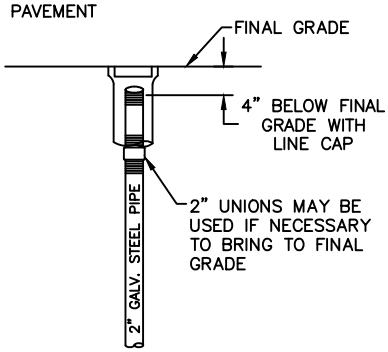

DETAIL "B"
N.T.S.

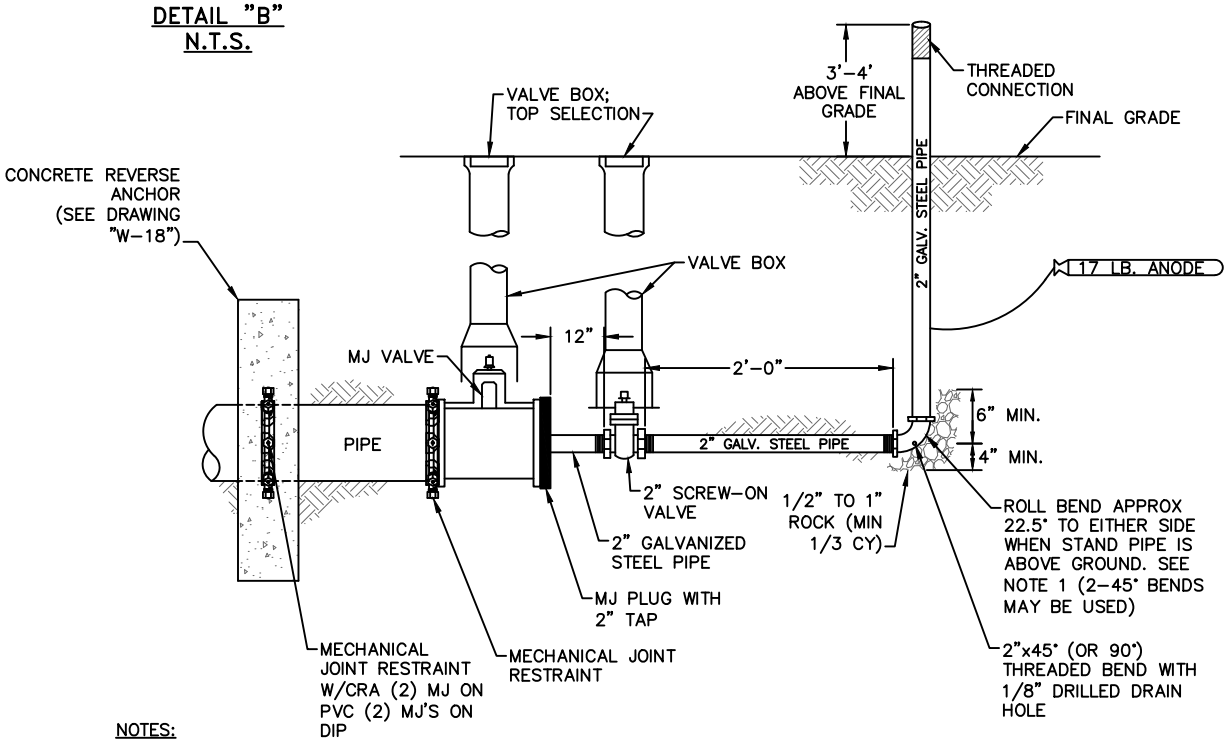

NOTES:

1. IF APPROPRIATE LOCATION FOR DISCHARGED WATER CANNOT BE REACHED BY ROLLING THE BEND, ADDITIONAL BENDS MAY BE REQUIRED BY THE TOWN INSPECTOR.
2. COAT TIE RODS, BEAM, AND GALVANIZED STEEL PIPE WITH EPOXY POLYAMIDE COATING, 10 MILS THICK, MIN.
3. ENTIRE BLOW-OFF ASSEMBLY MUST BE ADEQUATELY SUPPORTED, CONCRETE PAVER STONES MAY BE REQUIRED.
4. PIPE DOPE APPROVED FOR USE IN POTABLE WATER SYSTEMS MUST BE USED ON ALL THREADED FITTINGS.
5. TEMPORARY BLOW-OFF VALVE ASSEMBLIES SHALL BE INSPECTED BY THE TOWN INSPECTOR PRIOR TO BACKFILL. BACKFILL COMPACTION TO BE SAME AS PIPE COMPACTION SPECIFICATIONS.
6. 2" GALVANIZED PIPE MUST BE RATED TO 250 PSI AND CONFORM TO NSF-61 SPECIFICATIONS.
7. THE TOWN INSPECTOR MAY REQUIRE TIE-BACK RODS IN ADDITION TO THE MJ RESTRAINTS DEPENDING ON FIELD CONDITIONS AND SYSTEM PRESSURES.

TEMP BLOW-OFF ASSEMBLIES - 4", 6", & 8" MAINS W/MJ PLUG

Drawn: IGL	Revised:	PAONIA COLORADO	W-22
Date: JANUARY 2026	Revised:		
Scale: N.T.S.	Revised:		

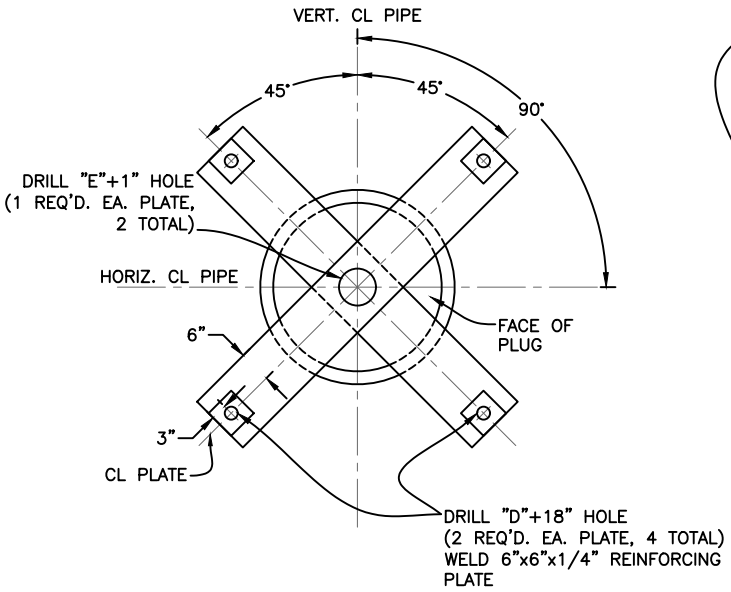

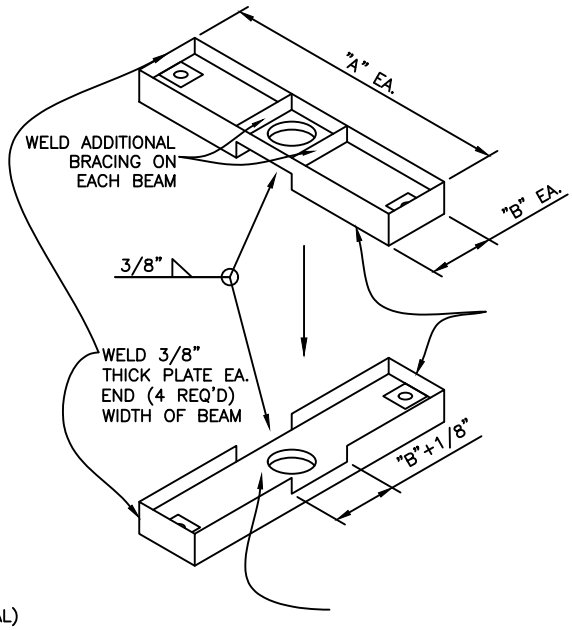

REFER TO W-24 FOR ALL DIMENSIONS & SIZES
"E"=SIZE OF BLOW-OFF ASSEMBLY
(WHERE "E"=2", USE STANDARD BLOW-OFF ASSEMBLY, W-22)

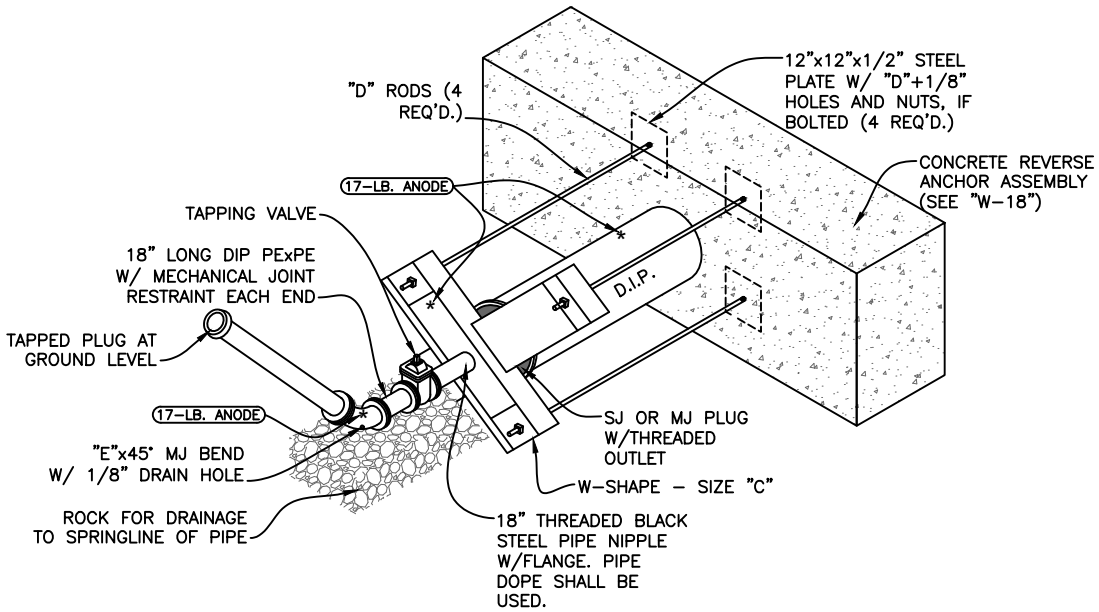

NOTES:

1. PIPE DOPE APPROVED FOR USE IN POTABLE WATER SYSTEMS MUST BE USED ON ALL THREADED JOINTS.
2. ENTIRE BLOW-OFF ASSEMBLY MUST BE FULLY SUPPORTED SO NO LOAD BEARS ON BLOW-OFF PIPING.
3. IF APPROPRIATE LOCATION FOR DISCHARGED WATER CANNOT BE REACHED BY ROLLING THE BEND, ADDITIONAL BENDS MAY BE REQUIRED.
4. COAT TIE-RODS, BEAMS, AND BLACK IRON PIPE WITH EPOXY POLYAMIDE COATING, 10 MILS THICK, MIN.

TEMP & PERMANENT BLOW-OFF ASSEMBLIES FOR MAINS 12"+

Drawn: IGL	Revised:	PAONIA COLORADO	W-23
Date: JANUARY 2026	Revised:		
Scale: N.T.S.	Revised:		

BLOW-OFF ASSEMBLY SIZING

MAIN PIPE DIA. (IN.)	STATIC PRESSURE RANGE (P.S.I.)	DIMENSIONS FROM DRAWING "W-23"				
		"A" (IN)	"B" (IN)	"C" (W-SHAPE)	"D" ROD SIZE (IN)	"E" BLOW-OFF PIPE SIZE (IN)
12	<100	36	10	W10 x 15	5/8	2
	101-150	36	10 1/4	W10 x 19	3/4	2
	151-200	36	10 1/8	W10 x 22	7/8	2
	201-250	36	10 1/8	W10 x 22	1	2
16	<100	40	12 1/4	W12 x 26	7/8	4
	101-150	40	12 1/4	W12 x 26	1	4
	151-200	40	12 1/4	W12 x 26	1 1/8	4
	201-250	40	12 1/2	W12 x 35	1 1/4	4
18	<100	42	12 1/4	W12 x 26	1	4
	101-150	42	12 1/2	W12 x 35	1 1/4	4
	151-200	42	12	W12 x 40	1 3/8	4
	201-250	42	12	W12 x 45	1 1/2	4
20	<100	44	12 1/4	W12 x 26	1	4
	101-150	44	12 1/2	W12 x 35	1 1/4	4
	151-200	44	12	W12 x 40	1 3/8	4
	201-250	44	12	W12 x 45	1 1/2	4
24	<100	48	12 1/2	W12 x 35	1 1/4	6
	101-150	48	12	W12 x 40	1 1/2	6
	151-200	48	12	W12 x 53	1 1/4*	6
	201-250	48	12	W12 x 53	1 1/8*	6
30	<100	54	12 1/4	W12 x 50	1 1/8*	6
	101-150	54	12 1/4	W12 x 58	1 3/8*	6
	151-200	54	12 1/8	W12 x 65	1 1/2*	6
	201-250	54	12 1/4	W12 x 72	1 5/8*	6
36	<100	60	12 1/4	W12 x 58	1 1/4*	8
	101-150	60	12 1/4	W12 x 72	1 1/2*	8
	151-200	60	12 3/4	W12 x 96	1 3/4*	8

NOTES:

1. ALL W-SHAPES FABRICATED FROM A36 STEEL.
2. ALL RODS SHALL BE MIN. GRADE A307 EXCEPT WHERE NOTED AS *. THESE SHALL BE MINIMUM STRENGTH EQUAL TO ASTM A325 RODS.
3. A 50% SURGE FACTOR HAS BEEN INCLUDED IN DESIGN.
4. FOR SIZES AND PRESSURES GREATER THAN THOSE SHOWN, SPECIAL DESIGN IS REQUIRED, APPROVED BY THE TOWN.

BLOW-OFF ASSEMBLY DIMENSION DATA FOR MAINS 12" +

Drawn: IGL	Revised:	
Date: JANUARY 2026	Revised:	
Scale: N.T.S.	Revised:	

PAONIA COLORADO

W-24

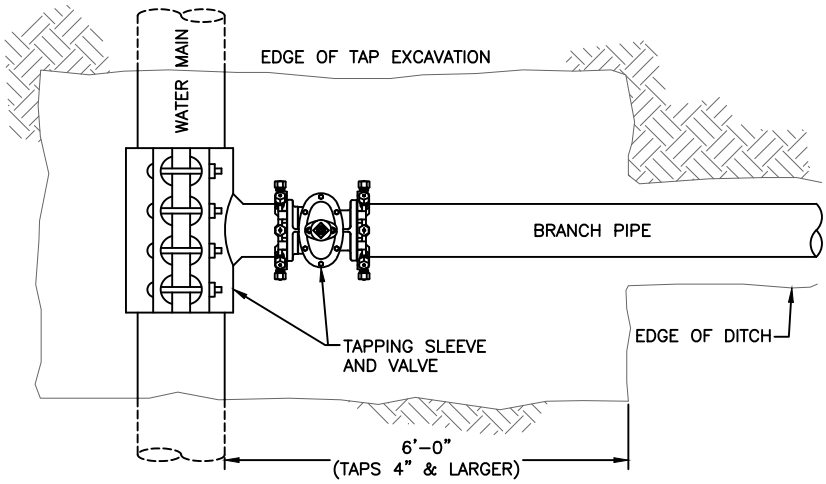

PLAN VIEW
N.T.S.

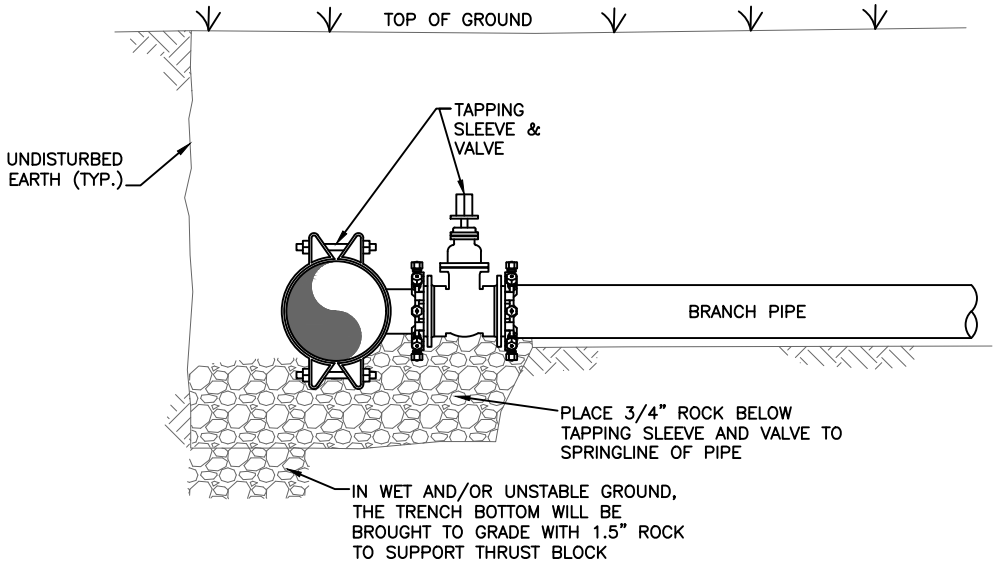

PROFILE VIEW
N.T.S.

PIPE TAPPING DETAIL

Drawn: IGL	Revised:	PAONIA COLORADO	W-25
Date: JANUARY 2026	Revised:		
Scale: N.T.S.	Revised:		

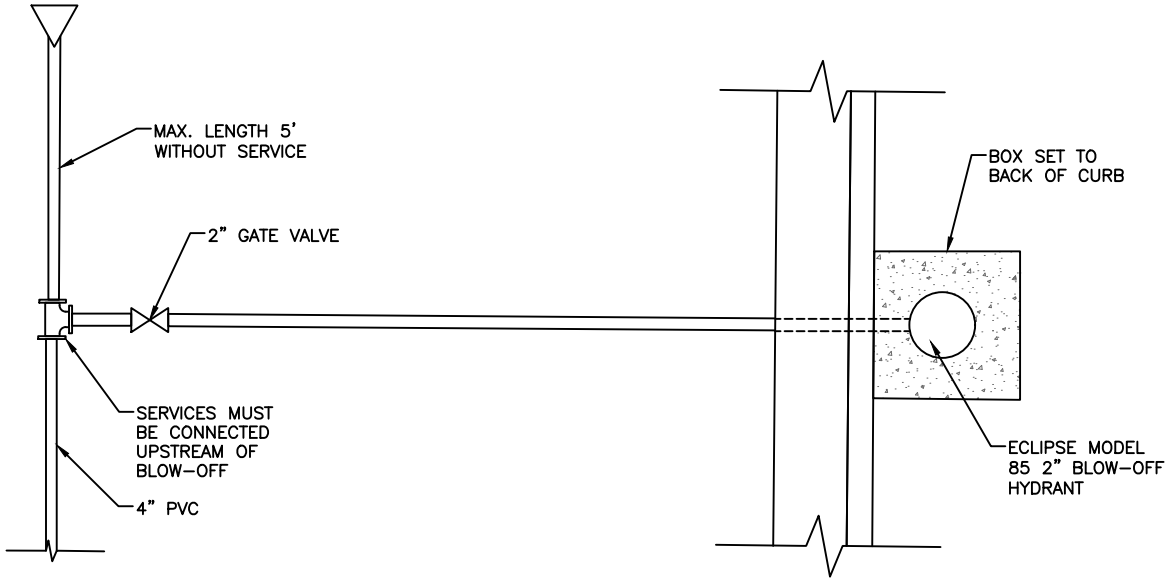

PLAN VIEW
N.T.S.

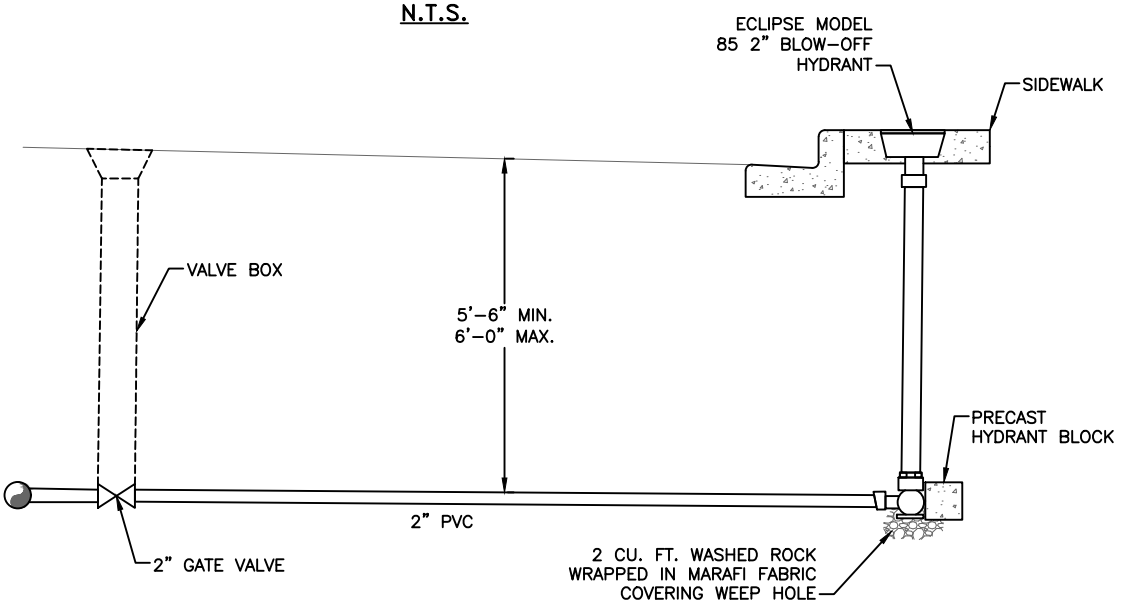

PROFILE VIEW
N.T.S.

CUL-DE-SAC BLOW-OFF DETAIL

Drawn: IGL	Revised:	PAONIA COLORADO	W-26
Date: JANUARY 2026	Revised:		
Scale: N.T.S.	Revised:		

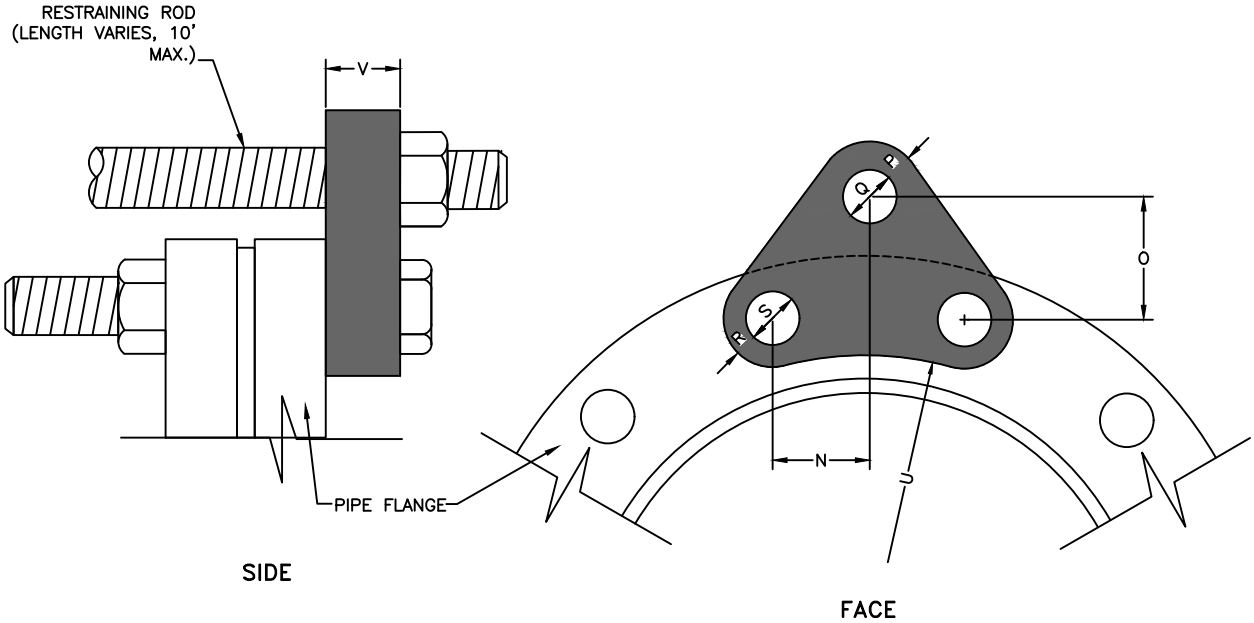

PIPE DIA. (IN.)	PRESS. CLASS (PSI)	"N" (IN.)	"O" (IN.)	H.S. ROD "P" (IN.)	H.S. ROD "Q" (IN.)	H.S. ROD ROD DIA. (IN.)	M.S. ROD "P" (IN.)	M.S. ROD "Q" (IN.)	M.S. ROD ROD DIA. (IN.)	"R" (IN.)	"S" (IN.)	"U" (IN.)	"V" (IN.)	NO REQ'D (EA)
6	150	1–15/16	2–1/4	1	7/8	3/4	1	7/8	3/4	7/8	7/8	3–3/4	3/4	2
	300	1–3/8	2–3/4	1	1	7/8	1	1	7/8	7/8	7/8	4–7/16	1	
8	150	2–1/4	2–3/4	1	7/8	3/4	1	7/8	3/4	1	7/8	4–7/8	3/4	2
	300	1–11/16	2–7/8	1	1	7/8	1	1	7/8	1	1	5–1/2	1	
12	150	2–3/16	2–3/4	1–1/4	1–1/8	1	1–1/4	1–1/8	1	1–1/8	1	7–1/4	7/8	2
	300	1–3/4	3–3/4	1–3/8	1–1/4	1–1/2	1–3/8	1–3/8	1–1/4	1–1/4	1–1/8	7–5/8	1–1/4	
16	150	2–1/16	2–3/4	1–1/2	1–3/8	1–1/4	1–1/2	1–3/8	1–1/4	1–1/4	1–1/8	9–3/8	1–1/8	3
	300	1–3/4	4–1/4	1–1/2	1–1/2	1–3/8	1–1/2	1–1/2	1–3/8	1–1/2	1–3/8	9–7/8	1–1/2	
18	150	2–1/4	2–1/2		1–1/8	1		1–1/8	1		1–1/8	10	1–1/8	4
	300	1–7/8	3–3/4	1–1/2	1–1/2	1–1/2	1–1/2	1–1/2	1–1/2	1–1/2	1–3/8	10–3/16	2	4
20	150	2–5/8	1–15/16		1–1/8	1		1–1/8	1		1–1/4	11–1/8	1–1/4	4
	300	2	3–1/16	1–3/8	1–9/16	1–1/2	1–3/8	1–9/16	1–1/2	1–3/8	1–3/8	10–1/2	2–1/2	4
24	150	2–5/16	2–5/8		1–1/8	1		1–1/8	1		1–3/8	13–1/4	1–1/4	6
	300	2–5/16	3–1/8	1–1/2	1–9/16	1–1/2	1–1/2	1–9/16	1–1/2	1–1/2	1–5/8	12–1/2	2–1/4	6

NOTES:

1. M.S. MEANS MILD STEEL ROD, ASTM STANDARD DESIGNATION A–36. NUTS SHALL BE ASTM STANDARD DESIGNATION A–307
2. H.S. MEANS HIGH STRENGTH STEEL ROD, ASTM STANDARD DESIGNATION A–193 GRADE B–7. NUTS SHALL BE ASTM STANDARD DESIGNATION A–193 GRADE 2–H.

FLANGE – LUG DETAIL

Drawn: IGL	Revised:	
Date: JANUARY 2026	Revised:	
Scale: N.T.S.	Revised:	

PAONIA COLORADO

W–27

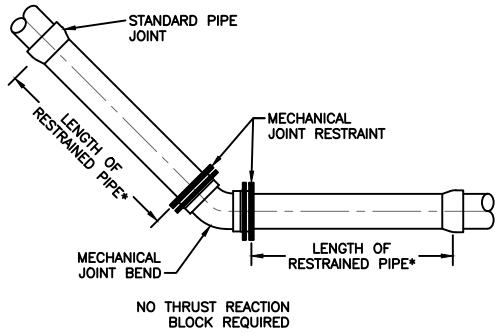

INSTALLATION FOR BENDS

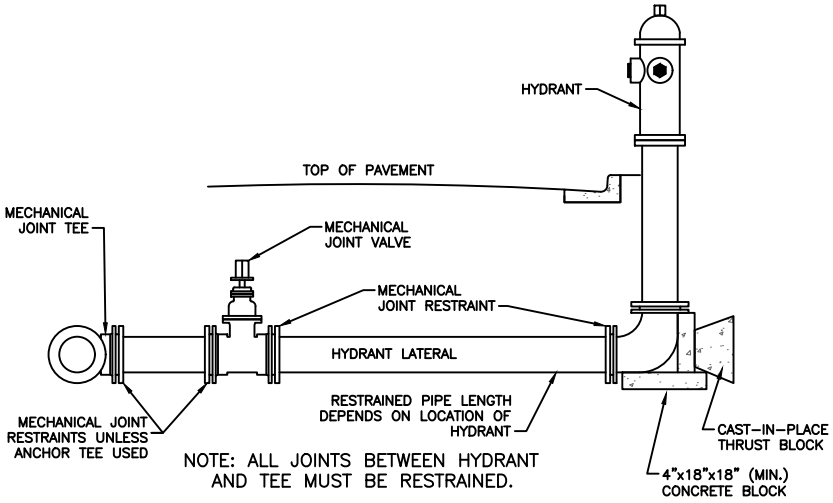

NOTE: ALL JOINTS BETWEEN HYDRANT AND TEE MUST BE RESTRAINED.

INSTALLATION FOR BENDS

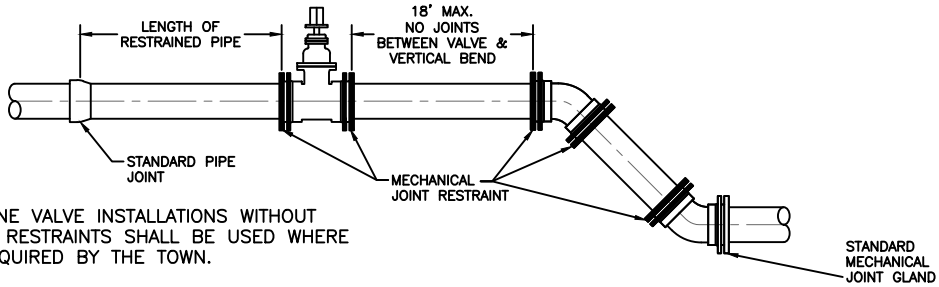

NOTE: FOR LINE VALVE INSTALLATIONS WITHOUT LOWERING, JOINT RESTRAINTS SHALL BE USED WHERE REQUIRED BY THE TOWN.

INSTALLATION FOR LINE VALVE & LOWERING

NOTES:

1. MECHANICAL JOINTS SHALL BE APPROVED ACCORDING TO MATERIAL SPECIFICATION FOR DIP AND PVC PIPE.
2. LENGTH OF PIPE REQUIRING JOINT RESTRAINT SHALL BE DETERMINED FROM CHART ON DRAWING W-13.
3. RESTRAINED JOINT PVC PIPE SHALL NOT BE USED FOR LOWERINGS.
4. IF A JOINT IS LOCATED BETWEEN ANY FITTINGS INCORPORATED INTO THE ASSEMBLY, BELL/JOINT RESTRAINTS MUST BE USED.

APPLICATIONS FOR MECHANICAL JOINT RESTRAINTS

Drawn: IGL	Revised:	PAONIA COLORADO	W-28
Date: JANUARY 2026	Revised:		
Scale: N.T.S.	Revised:		

PAGE LEFT BLANK INTENTIONALLY
FOR SHEET W-29

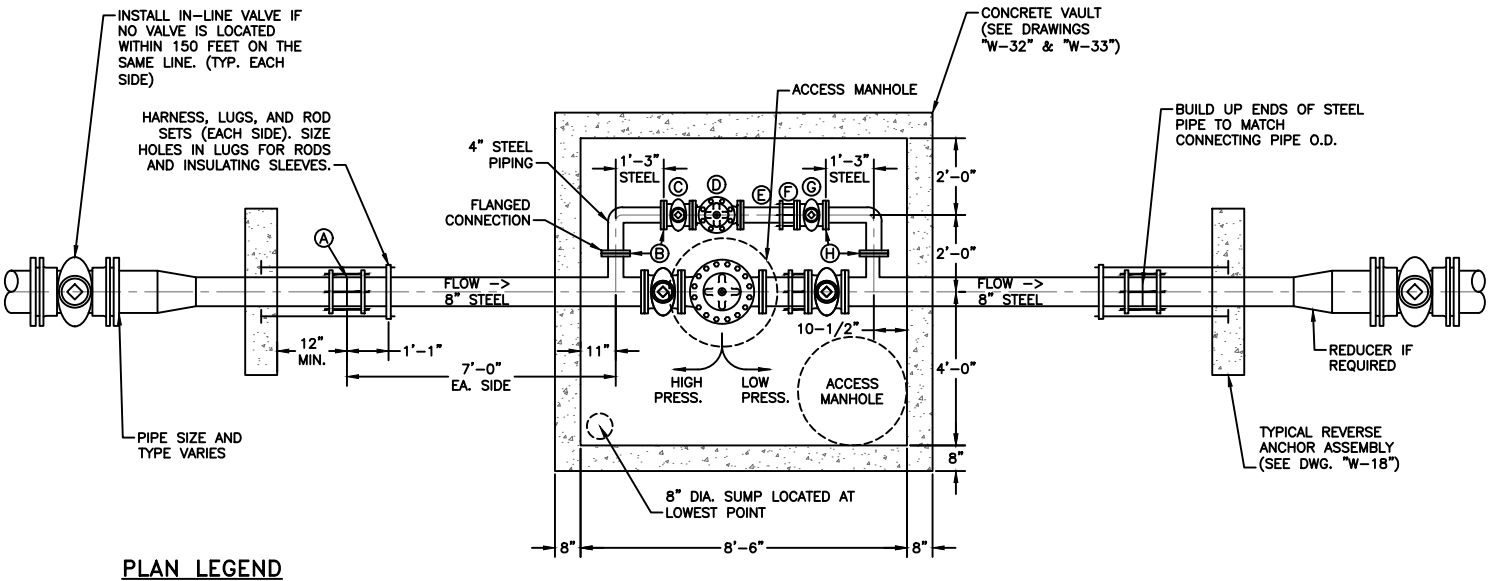

PLAN LEGEND

- (A) 8" STYLE 39 DRESSER COUPLING, OR EQUAL
- (B) 300-LB. FLANGES
- (C) 4" 250-LB. GATE VALVE
- (D) 4" 250-LB. CLA-VAL REGULATOR OR APPROVED EQUAL
- (E) 4" STEEL FITTING, 300-LB. FLANGE ONE END, SPIGOT ONE END, 1'-3" LONG.
- (F) 4" 150-LB. DRESSER STYLE 128 FLANGED ADAPTER OR EQUAL. TIE BACK TO REGULATOR W/ TWO 3/4" RODS. (SEE DETAIL 'A' THIS SHEET).
- (G) 4" 150-LB. GATE VALVE
- (H) CLASS 'E' FLANGES

PLAN VIEW
N.T.S.

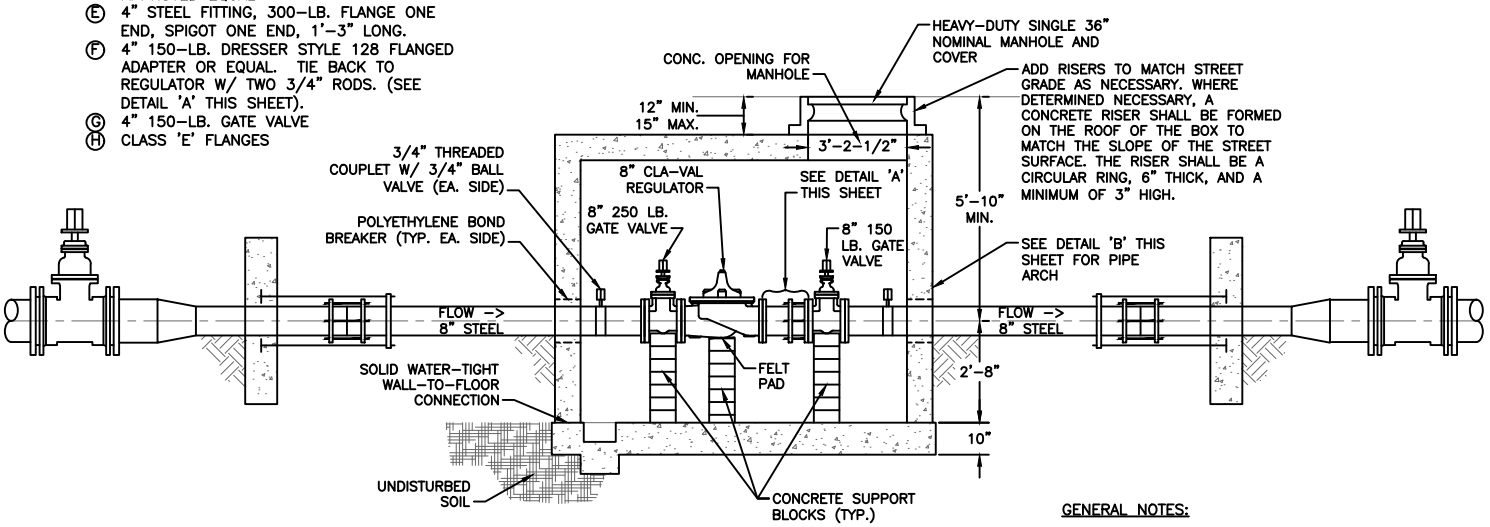

PROFILE VIEW
N.T.S.

GENERAL NOTES:

1. CONCRETE VAULTS SHALL MEET ALL CRITERIA AS OUTLINED ON STANDARD DRAWINGS W-32 & W-33.
2. ALL REGULATOR INSTALLATIONS LARGER THAN 8-INCH SHALL BE SPECIALLY DESIGNED AND APPROVED BY THE TOWN.
3. VAULTS SHOULD BE WRAPPED, SEALED, AND HAVE A SIPHON DEVICE FOR REMOVING WATER.

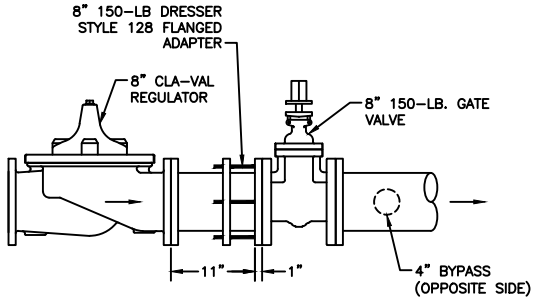

DETAIL 'A' – FLANGED ADAPTOR
N.T.S.

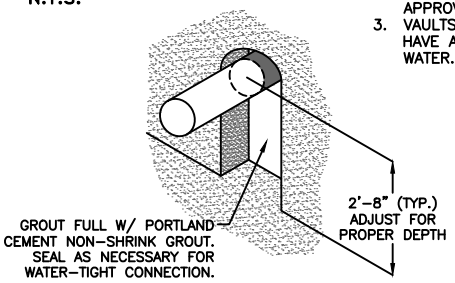

DETAIL 'B' – PIPE ARCH
N.T.S.

8" SIZE PRESSURE REGULATOR STATION

Drawn: IGL	Revised:	PAONIA COLORADO	W-30
Date: JANUARY 2026	Revised:		
Scale: N.T.S.	Revised:		

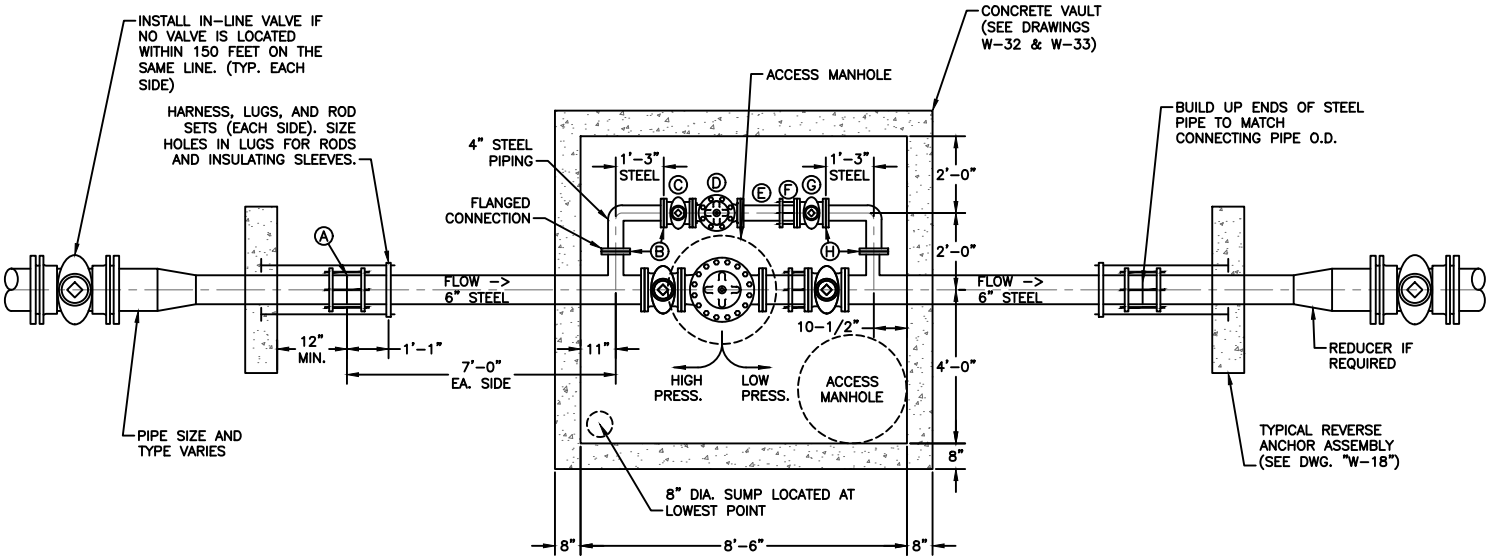

PLAN LEGEND

- Ⓐ 6" STYLE 39 DRESSER COUPLING, OR EQUAL
- Ⓑ 300-LB. FLANGES
- Ⓒ 4" 250-LB. GATE VALVE
- Ⓓ 4" 250-LB. CLA-VAL REGULATOR
- Ⓔ 4" STEEL FITTING, 300-LB. FLANGE ONE END, SPIGOT ONE END, 1'-3" LONG.
- Ⓕ 4" 150-LB. DRESSER STYLE 128 FLANGED ADAPTER OR EQUAL. TIE BACK TO REGULATOR W/ TWO 3/4" RODS. (SEE DETAIL 'A' THIS SHEET).
- Ⓖ 4" 150-LB. GATE VALVE
- Ⓗ CLASS 'E' FLANGES

PLAN VIEW
N.T.S.

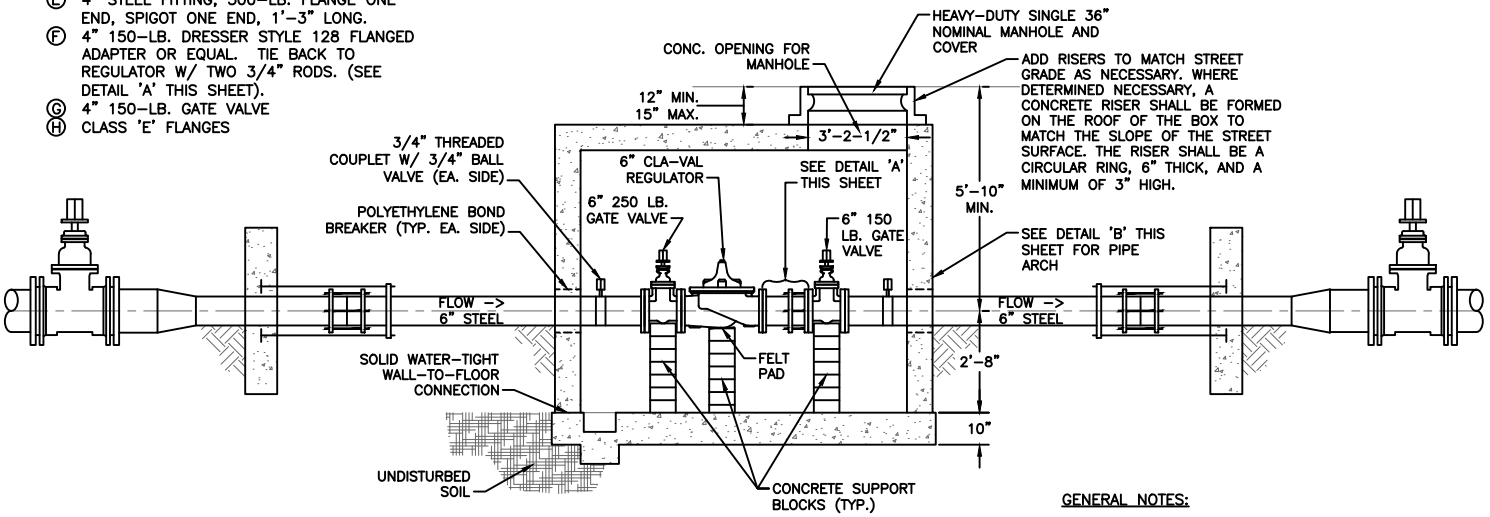

PROFILE VIEW
N.T.S.

GENERAL NOTES:

1. CONCRETE VAULTS SHALL MEET ALL CRITERIA AS OUTLINED ON STANDARD DRAWINGS W-32 & W-33.
2. ALL REGULATOR INSTALLATIONS LARGER THAN 8-INCH SHALL BE SPECIALLY DESIGNED AND APPROVED BY THE TOWN.

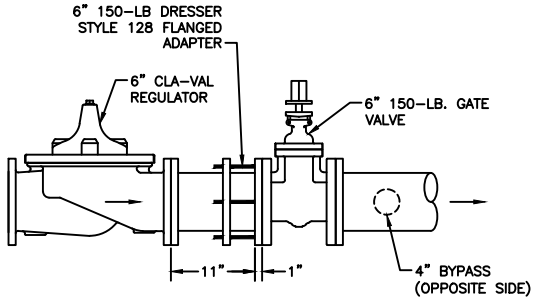

DETAIL 'A' – FLANGED ADAPTOR
N.T.S.

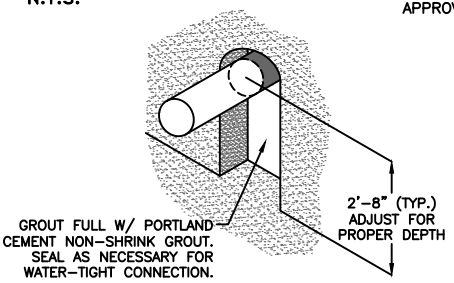

DETAIL 'B' – PIPE ARCH
N.T.S.

6" SIZE PRESSURE REGULATOR STATION

Drawn: IGL	Revised:	PAONIA COLORADO	W-31
Date: JANUARY 2026	Revised:		
Scale: N.T.S.	Revised:		

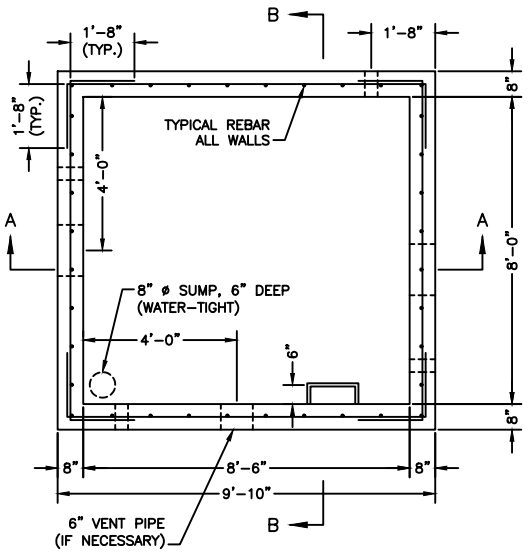

PLAN VIEW
N.T.S.

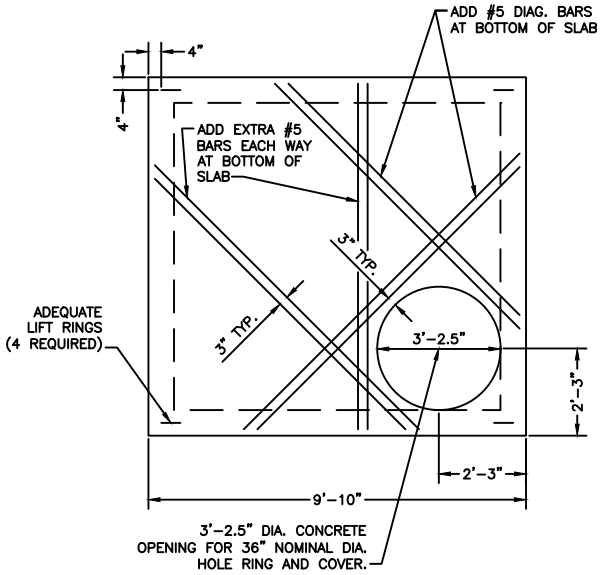

ROOF PLAN
N.T.S.

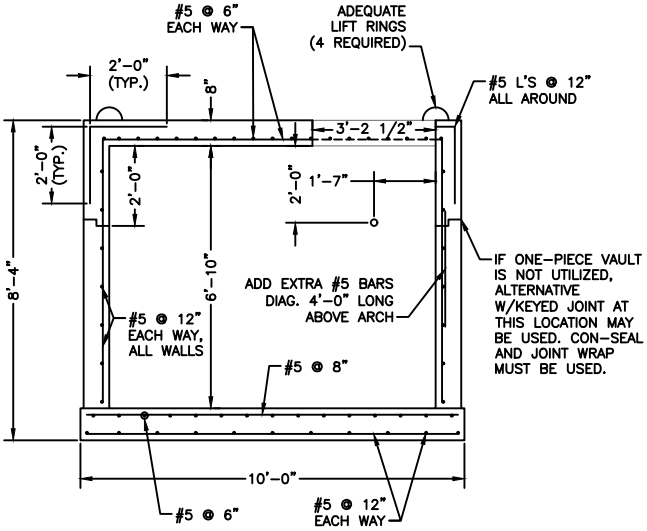

SECTION A-A
N.T.S.

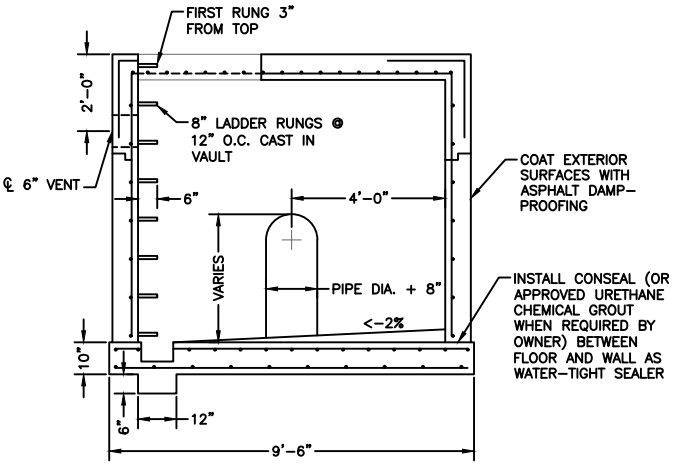

SECTION B-B
N.T.S.

NOTES:

1. ALL CONCRETE WORK SHALL COMPLY WITH TOWN STANDARD SPECIFICATIONS AND LATEST A.C.I.-318 CODE.
2. MINIMUM CONCRETE CLEARANCES FOR REBAR:
   - 3" WHERE POURED AGAINST EARTH
   - 2" WHERE FORMED AND THEN EXPOSED TO GROUND OR WEATHER FOR #6 OR LARGER. 1.5" FOR #5 AND SMALLER.
   - 1" WHERE EXPOSED TO INTERIOR SURFACES
3. ALL VAULTS SHALL BE CONSTRUCTED TO MEET HS20-44 TRAFFIC LOADING CONDITIONS AND 300 PSF SURCHARGE LOAD.

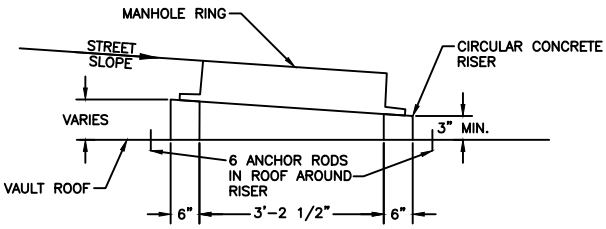

DETAIL A
CONCRETE RISER FOR MANHOLE
N.T.S.

STAND. CONC. VAULT FOR VALVE INSTALLATION (PRECAST)

Drawn: IGL	Revised:	PAONIA COLORADO	W-32
Date: JANUARY 2026	Revised:		
Scale: N.T.S.	Revised:		

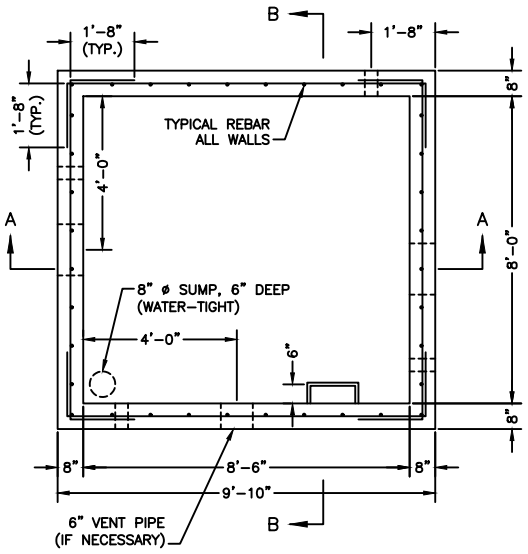

PLAN VIEW
N.T.S.

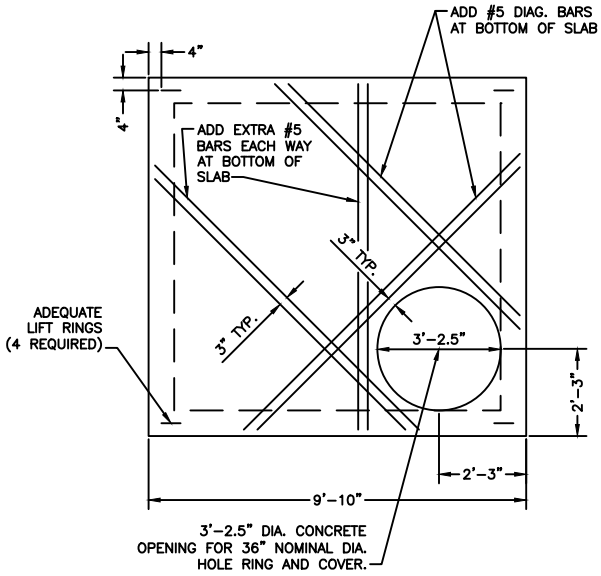

ROOF PLAN
N.T.S.

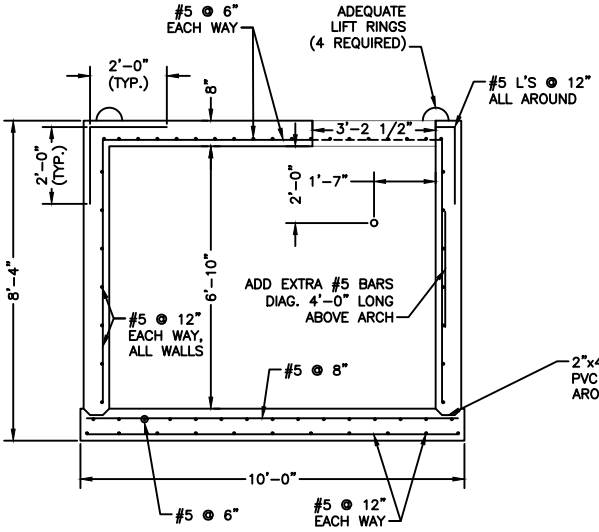

SECTION A-A
N.T.S.

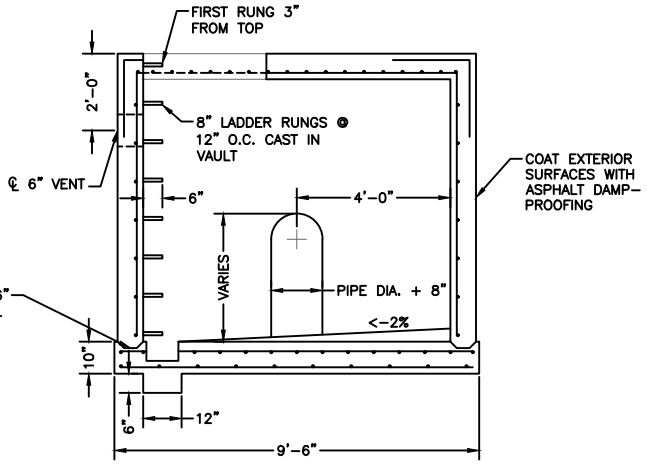

SECTION B-B
N.T.S.

NOTES:

1. ALL CONCRETE WORK SHALL COMPLY WITH TOWN STANDARD SPECIFICATIONS AND LATEST A.C.I.-318 CODE.
2. MINIMUM CONCRETE CLEARANCES FOR REBAR:
   - 3" WHERE POURED AGAINST EARTH
   - 2" WHERE FORMED AND THEN EXPOSED TO GROUND OR WEATHER FOR #6 OR LARGER. 1.5" FOR #5 AND SMALLER.
   - 1" WHERE EXPOSED TO INTERIOR SURFACES
3. ALL VAULTS SHALL BE CONSTRUCTED TO MEET HS20-44 TRAFFIC LOADING CONDITIONS AND 300 PSF SURCHARGE LOAD.

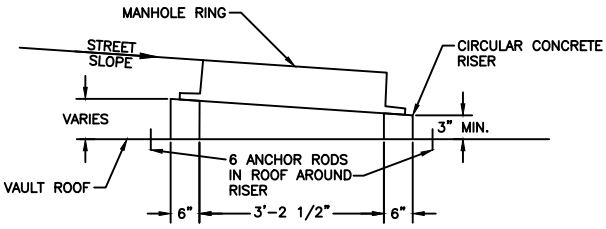

DETAIL A
CONCRETE RISER FOR MANHOLE
N.T.S.

STAND. CONC. VAULT FOR VALVE INSTALLATION (CAST-IN-PLACE)

Drawn: IGL	Revised:	PAONIA COLORADO	W-33
Date: JANUARY 2026	Revised:		
Scale: N.T.S.	Revised:		

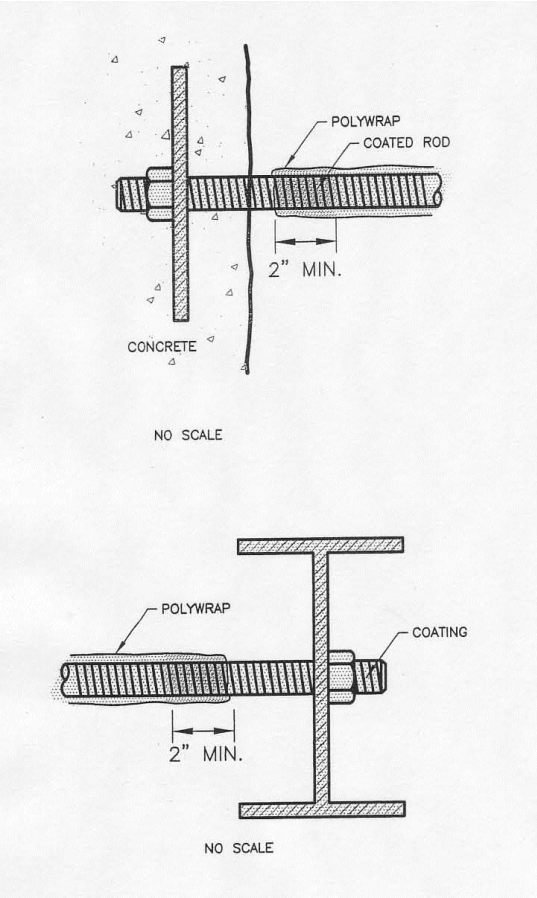

METAL IN CONCRETE:

1. COAT METAL PARTS WHERE IN CONTACT WITH CONCRETE, EXTENDING COATING SEVERAL INCHES BEYOND THE CONCRETE.
2. POLYWRAP THE ROD, OVERLAPPING THE POLYWRAP AND THE COATING A MINIMUM OF 2".
3. SECURE POLYWRAP TO THE ROD USING 2" WIDE, 10-MIL POLYETHYLENE PRESSURE-SENSITIVE TAPE.

ROD THROUGH I-BEAM:

1. COAT ENTIRE I-BEAM,
2. COAT NUT AND ROD, EXTENDING COATING SEVERAL INCHES BEYOND THE BEAM.
3. POLYWRAP THE ROD, OVERLAPPING THE COATING A MINIMUM OF 2".
4. SECURE POLYWRAP WITH TAPE.

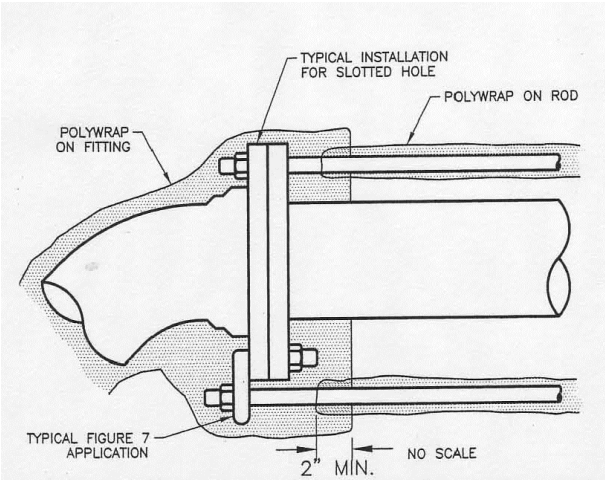

RODS IN MJ FITTING:

1. POLYWRAP THE ROD AND SECURE WITH TAPE.
2. POLYWRAP THE FITTING OVERLAPPING THE POLYWRAP ON THE ROD A MINIMUM OF 2" AND SECURE WITH TAPE.

PROTECTING TIE RODS

Drawn: IGL	Revised:	PAONIA COLORADO	W-34
Date: JANUARY 2026	Revised:		
Scale: N.T.S.	Revised:		

SERVICE TAPS 1–1/2"
& 2" TAPPING SADDLE

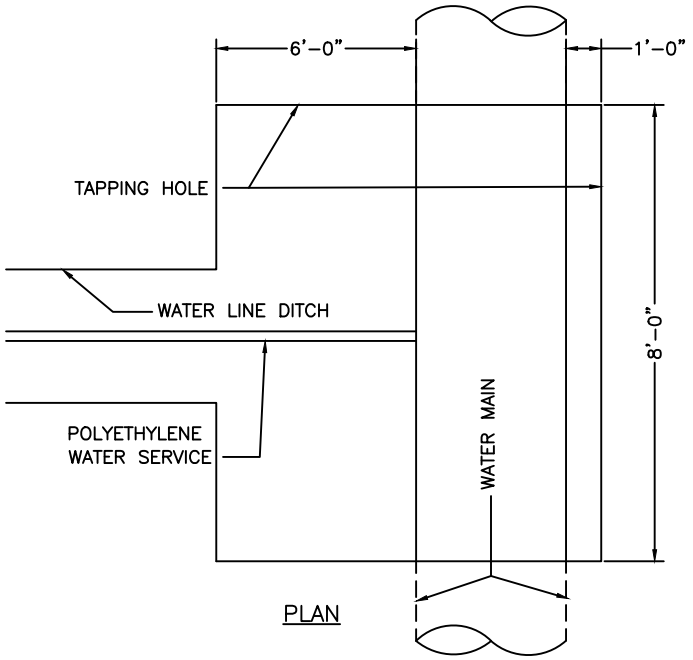

PLAN

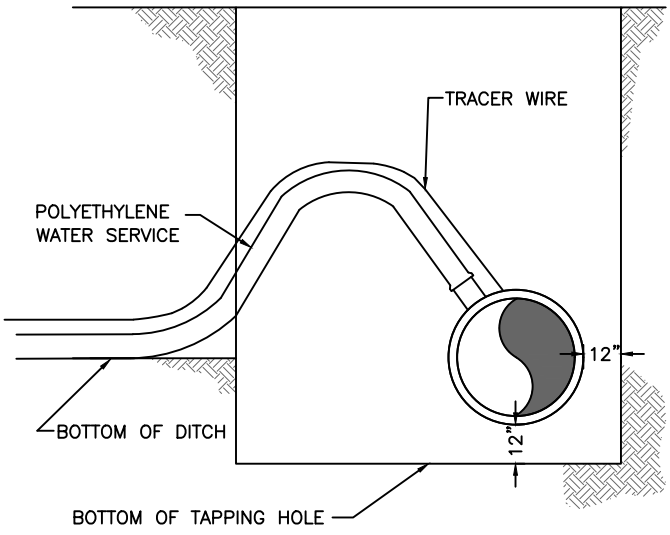

ELEVATION

SERVICE TAPS 3/4" &
1" CORPORATION ONLY

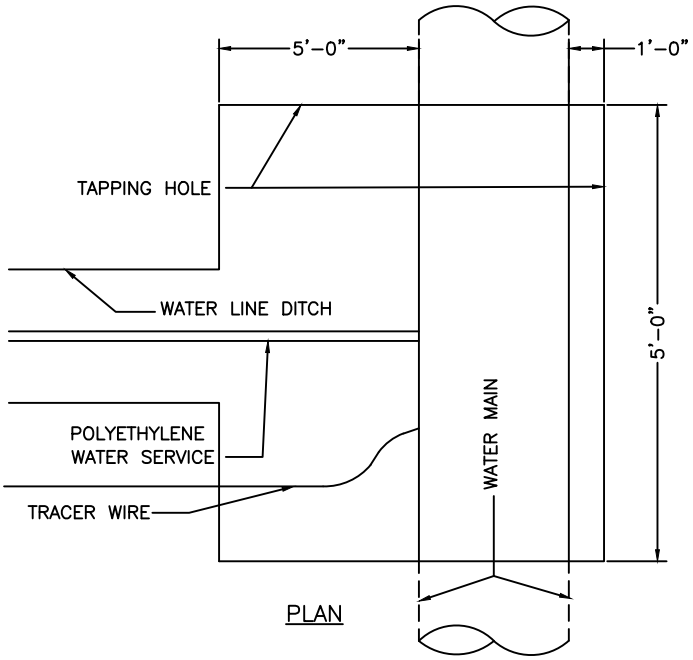

PLAN

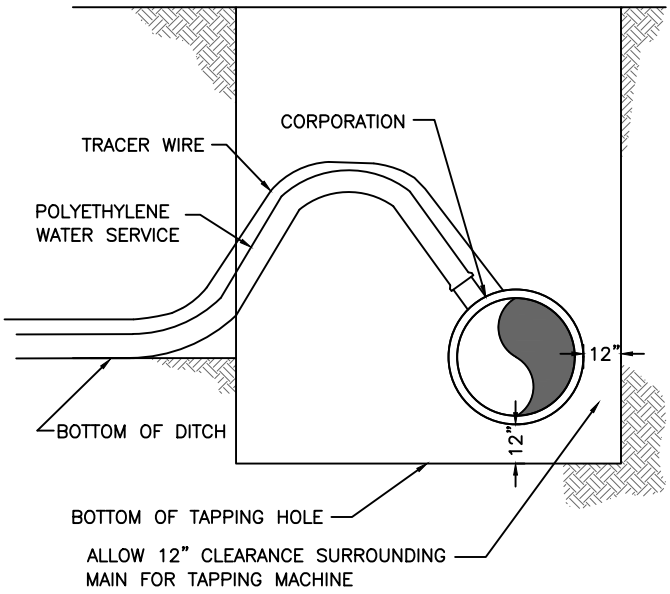

ELEVATION

NOTES:

1. TOWN TAPS TO THE WATER MAIN SHALL BE MADE ONLY WHEN APPROVED BY THE DISTRICT. ALL TAPS SHALL USE TAPPING SADDLES. TAPPING SADDLES SHALL HAVE TWO BRASS BANDS AND A BRASS CORPORATION CONNECTION.

2. POLYETHYLENE SERVICE LINE SHALL BE INSTALLED IN A SNAKE–LIKE FASHION FROM MAIN LINE TO WATER METER.

TAPPING DETAIL – 3/4" THROUGH 2"

Drawn: IGL	Revised:	PAONIA COLORADO	W–35
Date: JANUARY 2026	Revised:		
Scale: N.T.S.	Revised:		

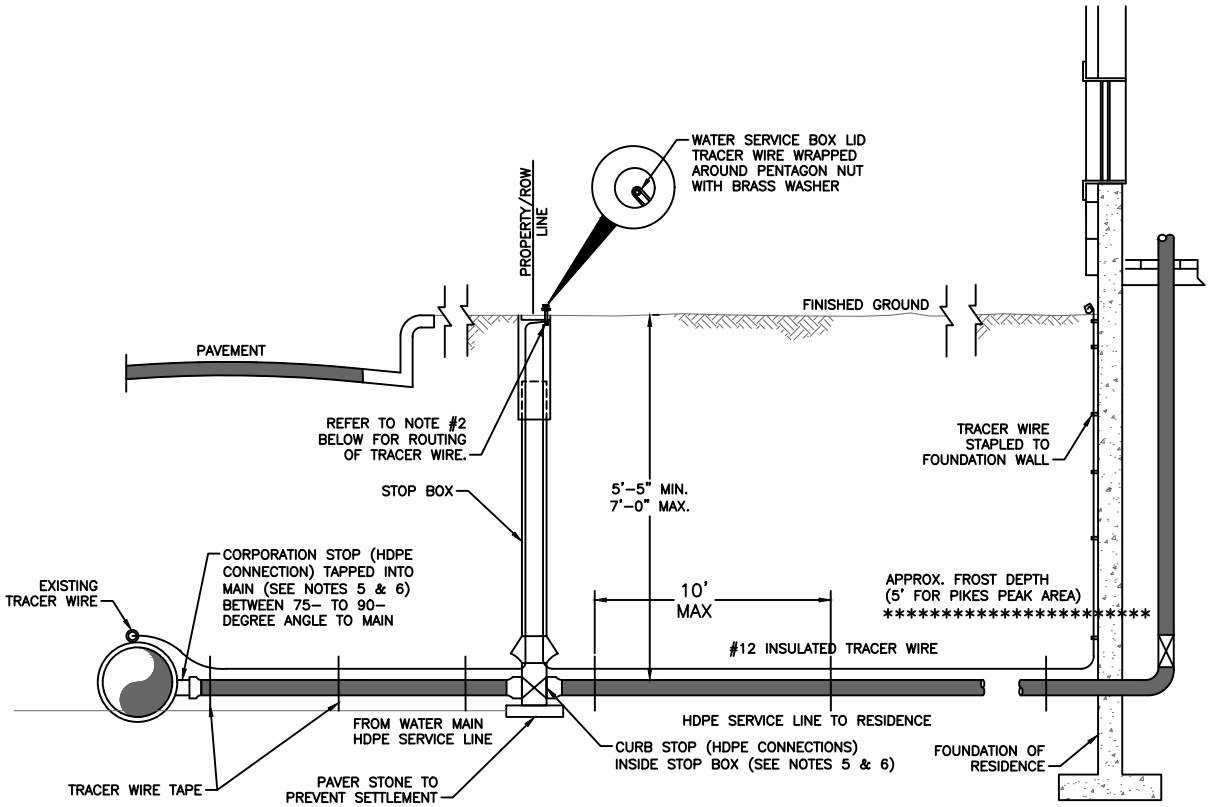

WATER SERVICE LINE NOTES:

1. NO. 12 INSULATED TRACER WIRE SHALL BE PLACED ALONG SERVICE LINE AND SHALL BE A CONTINUOUS (WITHOUT SPLICES) LENGTH.

2. WHEN A NEW PLASTIC SERVICE IS CONNECTED TO A PVC MAIN, THE SERVICE LINE TRACER WIRE SHALL BE CONNECTED TO THE MAIN'S TRACER WIRE WITH A SPLIT-BOLT CONNECTOR. THE TRACER WIRE IS THEN TAPED ALONG THE SERVICE LINE IN AT LEAST 3 LOCATIONS NOT TO EXCEED 10'. ALL CURB STOP BOXES SHALL HAVE A 1-1/2" DIAMETER SCHD 40 PVC PIPE TELESCOPED INSIDE WITH A BELL END TO FIT OVER THE TOP OF THE CURB STOP VALVE. TRACER WIRE SHALL BE EXTENDED UP THE INSIDE OF CURB STOP BOX BUT OUTSIDE THE 1-1/2" SCHD 40 PVC PIPE. TRACER WIRE SHALL BE WRAPPED AROUND CURB STOP BOLT UNDER A BRASS WASHER. THE WIRE WILL THEN BE ROUTED BACK DOWN INSIDE THE CURB BOX AND OUTSIDE THE SCHD 40 PVC, AND TAPED AGAIN TO THE SERVICE LINE UNTIL IT REACHES THE POINT WHERE THE SERVICE LINE ENTERS THE BUILDING. AT THIS POINT, THE TRACER WIRE WILL BE STAPLED TO THE FOUNDATION WALL THEN TURNED BACK TO FORM A ONE-INCH-LONG HOOK AND WRAPPED WITH 4" FILLER TAPE AND THEN 3/4" ELECTRICAL TAPE FOR PROTECTION AT THE SURFACE.

3. TO ASSIST IN PE PIPE LOCATING, A 9-LB. ANODE SHOULD BE CONNECTED TO THE END OF THE TRACER WIRE AND THE WATER MAIN TRACER WIRE EVERY 1,000 FEET ALONG THE LENGTH OF THE WATER MAIN. THE NEW ANODE WILL BE ATTACHED TO THE WATER SERVICE/WATER MAIN TRACER WIRE WITH A SPLIT-BOLT CONNECTOR. THE CONNECTOR IS TO BE WRAPPED FIRST WITH A 4" FILLER TAPE AND THEN 3/4" ELECTRICAL TAPE FOR PROTECTION AGAINST CORROSION.
4. THE APPROPRIATE CLEARANCES BETWEEN ANODES AND STEEL PIPES OR OTHER STRUCTURES MUST BE MAINTAINED PER WATER LINE EXTENSION & SERVICE STANDARDS.
5. BRASS FITTINGS, CORP. STOP, AND CURB STOP SHALL BE WRAPPED WITH WAX TAP FOR PROTECTION PER THE WATER LINE EXTENSION & SERVICE STANDARDS.
6. STIFFENERS SHALL BE INSTALLED WITHIN THE HDPE SERVICE LINE AT THE CONNECTION POINTS OF THE FITTINGS.

TYPICAL INSTALLATION FOR SERVICE LINE & STOP BOX

Drawn: IGL	Revised:	PAONIA COLORADO	W-36
Date: JANUARY 2026	Revised:		
Scale: N.T.S.	Revised:		

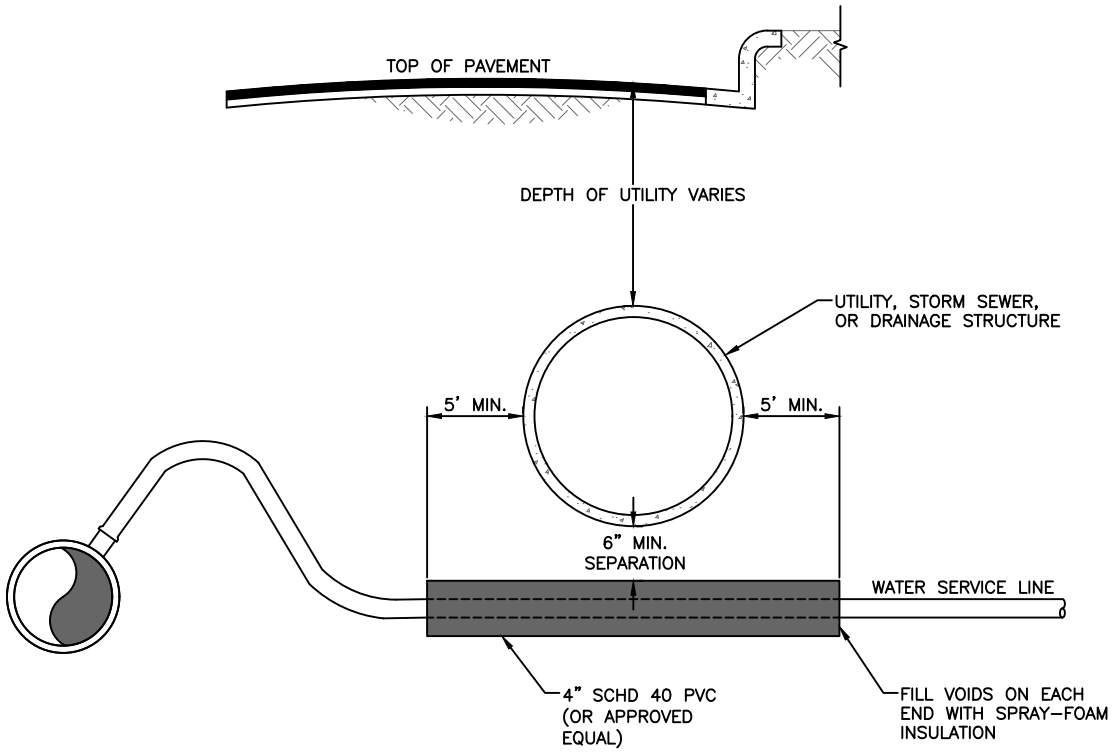

NOTES:

1. SHOULD ANY SITUATION BE ENCOUNTERED THAT DOES NOT MEET STANDARDS, NOTIFY TOWN INSPECTOR.
2. REFERENCE SECTION 2 OF THESE STANDARDS FOR CROSSING DESIGN INFORMATION.
3. A SLEEVE IS REQUIRED WHERE SEPARATION IS LESS THAN 18" FROM BOTTOM OF UTILITY TO TOP OF WATER SERVICE OR WHERE THE UTILITY IS 30" OR GREATER IN SIZE.
4. PROVIDE WATERTIGHT SEAL ON BOTH ENDS OF SLEEVE.
5. IF THE SERVICE IS LOCATED WITHIN STORM SEWER BEDDING, IT SHALL BE SLEEVED THROUGH THE BEDDING A MINIMUM OF 5' EITHER SIDE REGARDLESS OF DEPTH.
6. WHERE COMPACTION CANNOT BE ACHIEVED, FLOWFILL SHALL BE USED.

INSTALLATION FOR SERVICE LINE W/ SLEEVE UNDER A UTILITY

Drawn: IGL	Revised:	PAONIA COLORADO	W-37
Date: JANUARY 2026	Revised:		
Scale: N.T.S.	Revised:		

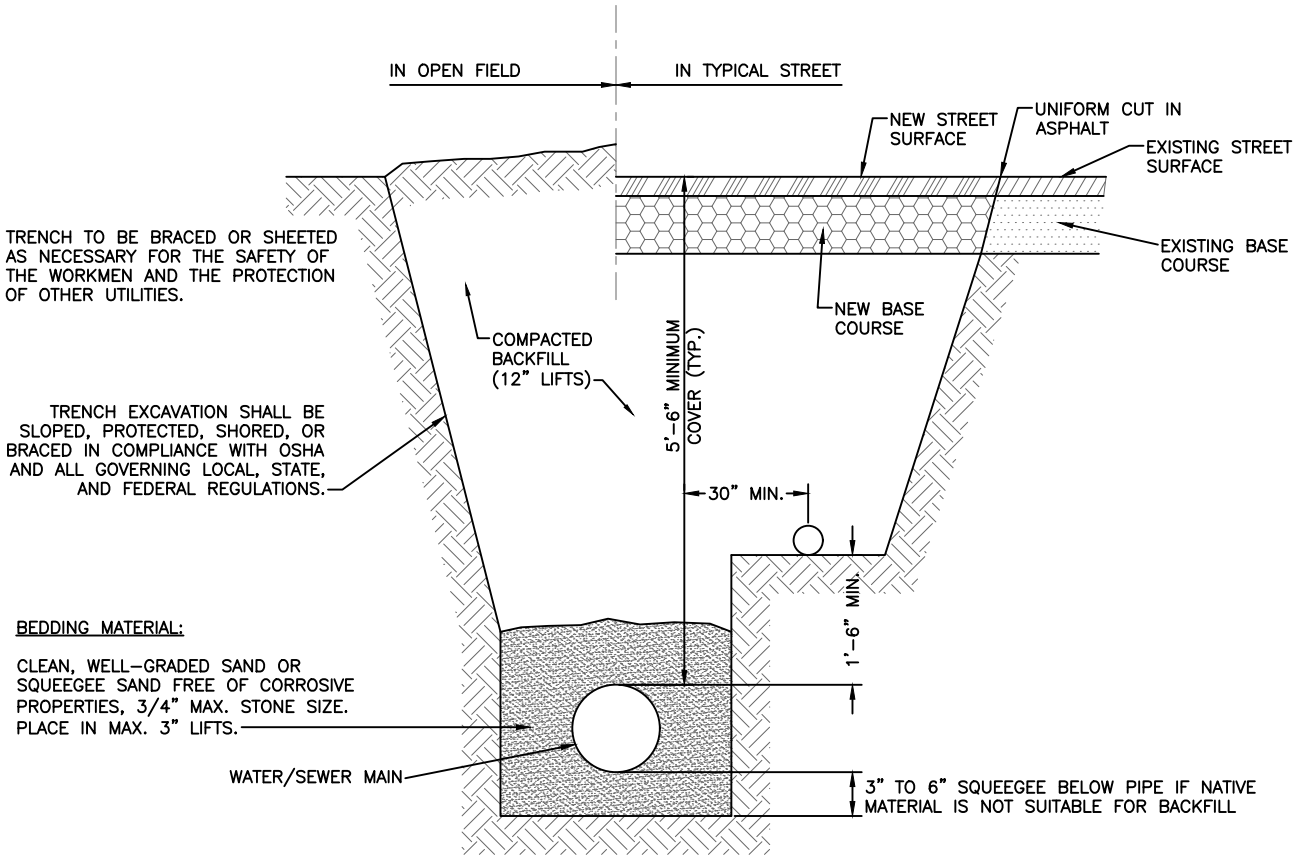

NOTES:

1. SPECIFIC CASE-BY-CASE APPROVAL BY THE TOWN SHALL BE REQUIRED PRIOR TO INSTALLATION OF WATER AND SEWER SERVICES IN A COMMON TRENCH.
2. USE OF COMMON TRENCH FOR WATER AND SEWER SERVICES SHALL NOT BE PERMITTED IN PUBLIC RIGHT-OF-WAY OR BETWEEN THE WATER CORPORATION STOP AND CURB STOP.
3. ALL MATERIALS AND INSTALLATION SHALL BE IN ACCORDANCE WITH THE SPECIFICATIONS AND ANY OTHER APPLICABLE CODE OR REGULATION.

TYP. SERVICE LINE TRENCH – COMMON DITCH FOR WATER/SEWER

Drawn: IGL	Revised:	PAONIA COLORADO	W-38
Date: JANUARY 2026	Revised:		
Scale: N.T.S.	Revised:		

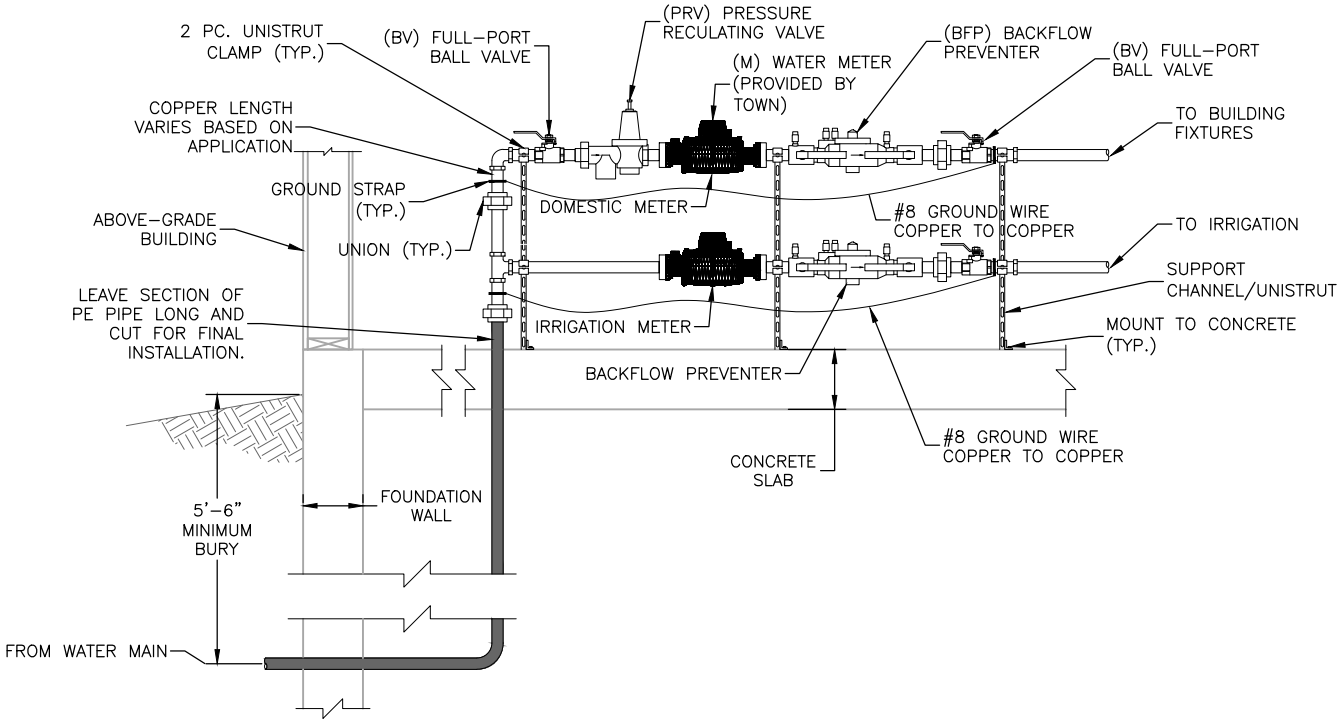

METER SIZE	METER LENGTH*	WITH TAIL PIECE
5/8" (3/4" SHORT) METER	7.5"	12"
3/4" METER	9"	13–1/2"
1" METER	10–3/4"	15"
1–1/2" METER	12–5/8"	
2" METER	15–1/4"	

* CHECK METER LENGTH BEFORE INSTALLATION

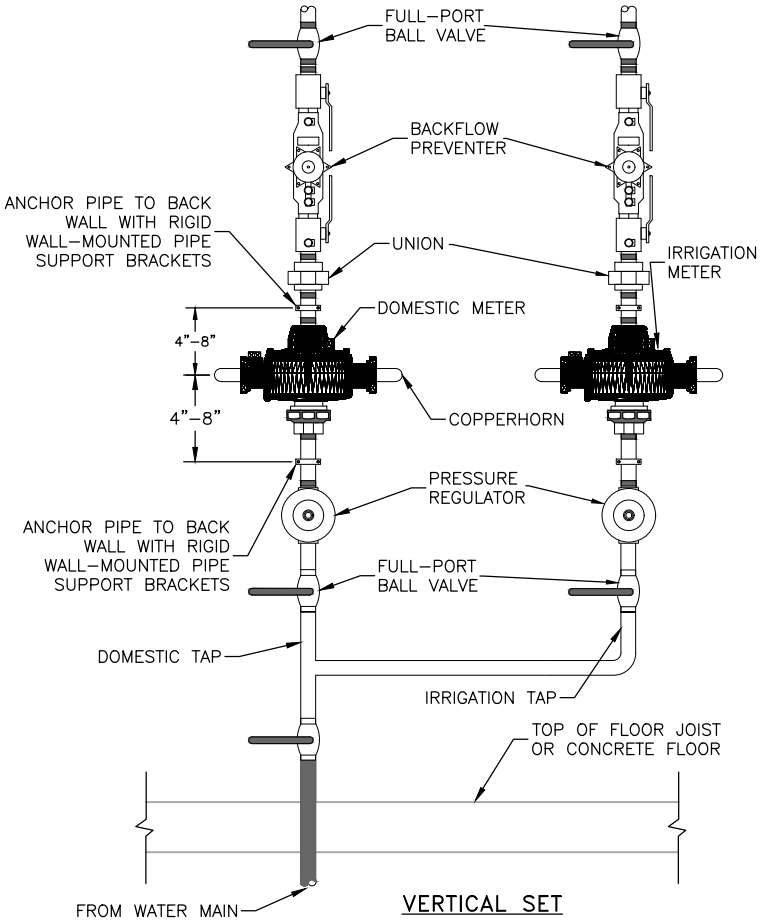

NOTES:

1. IN THE INTEREST OF SPACE CONSERVATION IT IS PERMISSIBLE TO INSTALL PIPING VERTICALLY DOWNSTREAM OF THE METER INCLUDING THE CHECK VALVE. THE PRESSURE REGULATOR ON THE INLET SIDE OF THE METER MAY BE INSTALLED IN A HORIZONTAL OR VERTICAL POSITION.
2. A SECOND PRESSURE REGULATOR MAY BE INSTALLED ON THE DEMAND SIDE OF THE METER DOWNSTREAM FROM A BRANCH SUPPLYING AN IRRIGATION SYSTEM IF REQUIRED. THE IRRIGATION SYSTEM BRANCH MUST BE DOWNSTREAM OF THE METER, CHECK VALVE, AND BALL VALVE.
3. ONLY MINIMAL SEPARATION IS ALLOWED BETWEEN FITTINGS UPSTREAM OF THE METER TO ALLOW PROPER INSTALLATION OF THE REQUIRED FITTINGS AS DEPICTED IN THESE DRAWINGS AND SPECIFICATIONS. IN NO CASE SHALL SEPARATION BE GREATER THAN NECESSARY WHICH COULD ALLOW A BRANCH, TEE, OR OTHER FITTING UPSTREAM OF THE METER THAN WHAT IS DEPICTED AND SPECIFIED HEREIN.
4. THE METER PIPE MUST BE SECURED BEFORE AND AFTER THE INLET AND OUTLET VALVES TO A SOLID UPRIGHT SUCH AS THE UNISTRUT OR 1/2" ALL–THREAD (OR MOUNTED BI–LATERALLY) AND ANCHORED TO THE FLOOR AND CLAMPED TO THE HORIZONTAL PIPING.
5. BANDING OR GROUND STRAPS MUST BE INSTALLED AROUND METER LOOP ON COPPER LINES (COPPER TO COPPER).
6. IF HDPE ENTERS STRUCTURE THROUGH SLAB, IT MUST BE ANCHORED AFTER THE TRANSITION FITTING ON THE COPPER TUBING.
7. MINIMUM SIZE = 1" HDPE CTS PIPE PER TOWN SPECIFICATIONS.

WATER METER LOOP FOR 3/4" THROUGH 2" METERS

Drawn: IGL	Revised:	PAONIA COLORADO	W–39
Date: JANUARY 2026	Revised:		
Scale: N.T.S.	Revised:		

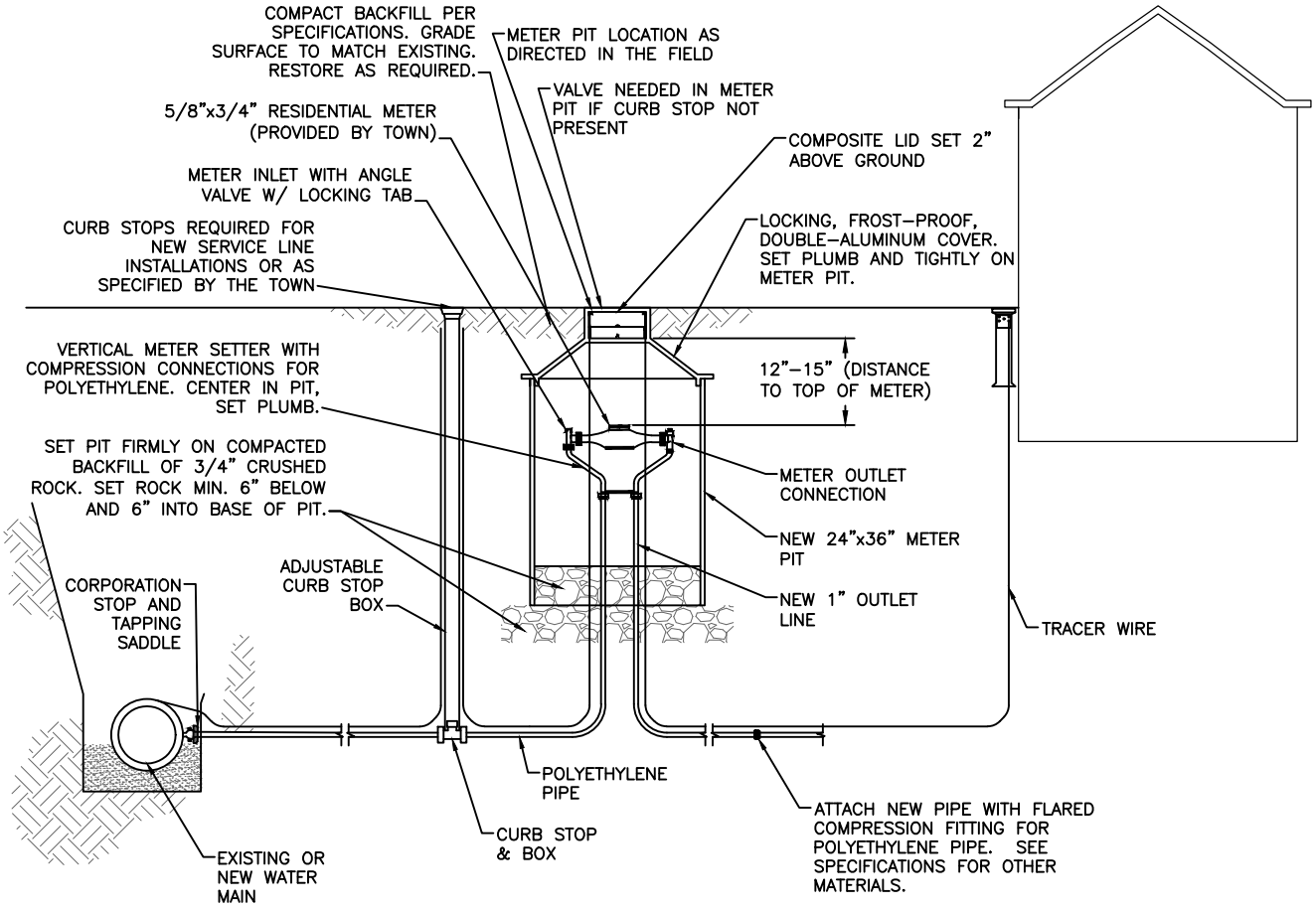

METER PIT SETUP
N.T.S.

3/4"-1" SERVICE LINE/METER PIT INSTALLATION

Drawn: IGL	Revised:	PAONIA COLORADO	W-40
Date: JANUARY 2026	Revised:		
Scale: N.T.S.	Revised:		

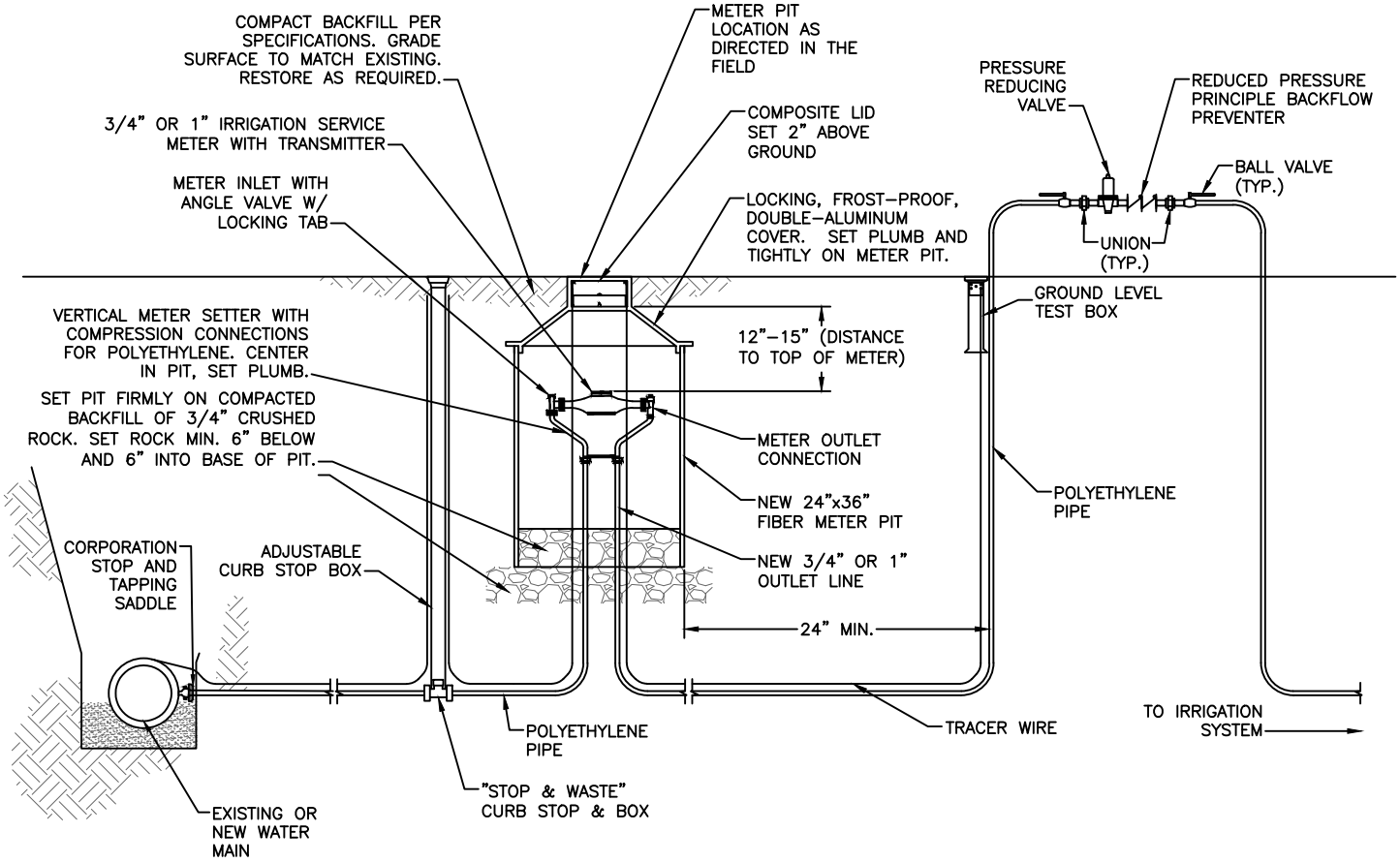

METER PIT SETUP
N.T.S.

IRRIGATION SERVICE 3/4" & 1" METER INSTALLATION

Drawn: IGL	Revised:	PAONIA COLORADO	W-41
Date: JANUARY 2026	Revised:		
Scale: N.T.S.	Revised:		

PAGE LEFT BLANK INTENTIONALLY
FOR SHEET W-42

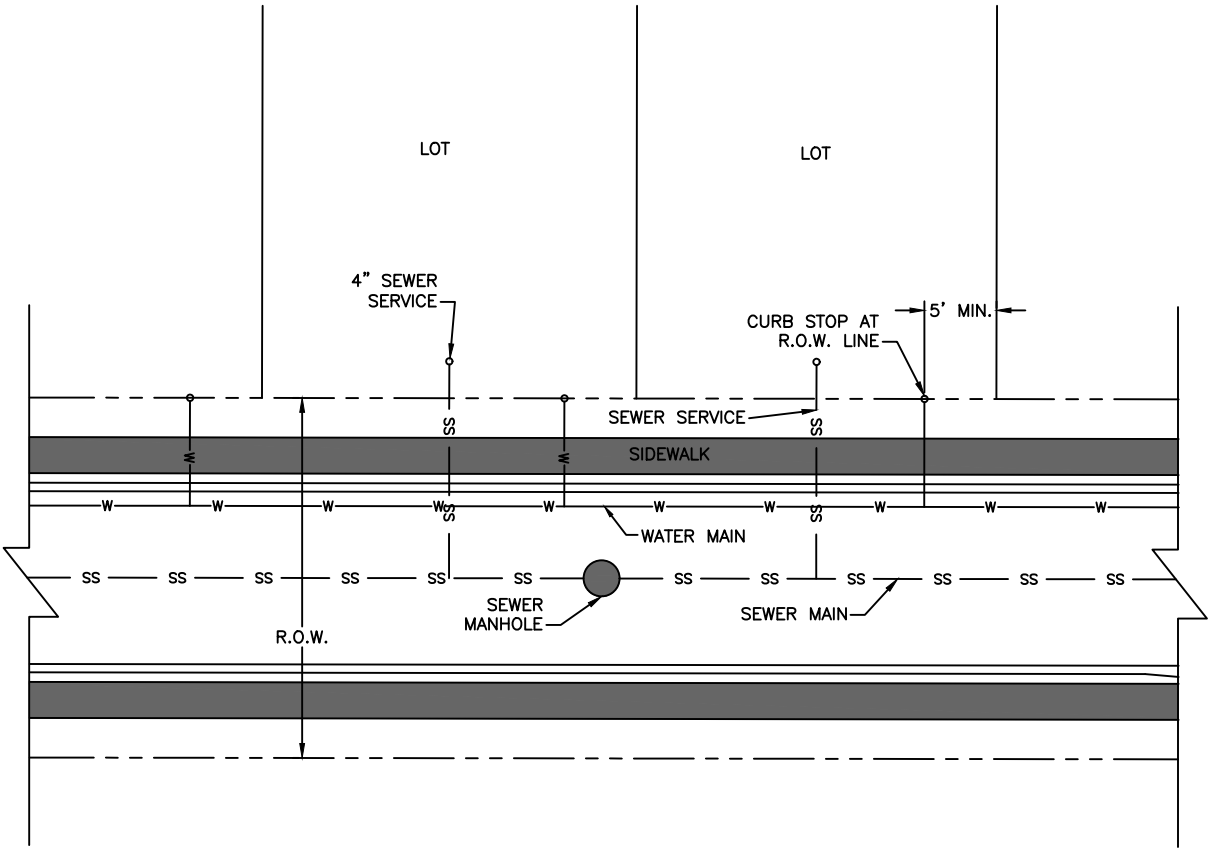

NOTES:

1. SEWER SERVICE TO BE PLACED APPROXIMATELY IN THE MIDDLE OF THE LOT AND EXTENDED 10 FEET PAST R.O.W.

2. SERVICES SHALL BE MARKED WITH 2"x4" POST AT TERMINATION POINT FOR LOCATION DURING CONNECTION TO RESIDENCE. POSTS SHALL BE SPRAY PAINTED BLUE FOR WATER AND GREEN FOR SEWER.

UTILITY SERVICE LOCATIONS

Drawn: GGM/SKG	Revised: DECEMBER 2021	PAONIA COLORADO	W-43
Date: JANUARY 2026	Revised:		
Scale: N.T.S.	Revised:		

PAGE LEFT BLANK INTENTIONALLY
FOR SHEET W-44

LEGEND

Ⓐ 2" CORPORATION–TAPERED THREADS INLET WITH 2" FEMALE IRON PIPE OUTLET (MUELLER OR FORD)

Ⓑ 2" CLOSE–THREADED BRASS NIPPLE

Ⓒ 2" THREADED GATE VALVE WITH STANDARD OPENING NUT

Ⓓ 2" THREADED INLET VAL–MATIC AIR/VACUUM COMBINATION AIR VALVE, MODEL 202C

Ⓔ 2"x90° PLASTIC ELBOW

Ⓕ 2"x90° BRASS THREADED ELBOW

Ⓖ 2" QUICK COUPLER

Ⓗ 2" THREADED BRASS NIPPLE

Ⓘ 2" ROMAC MODEL 202BS TAPPING SADDLE

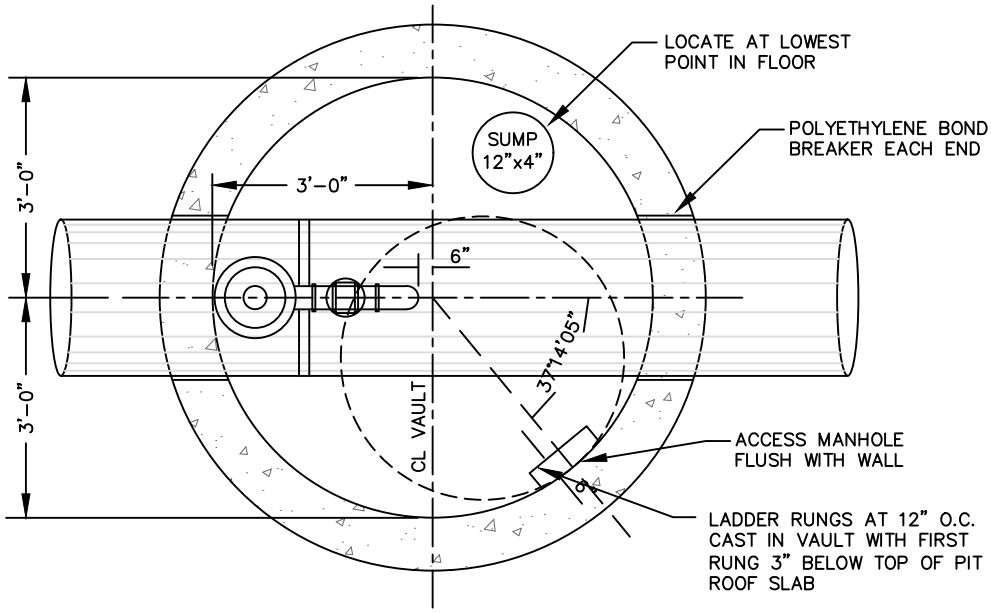

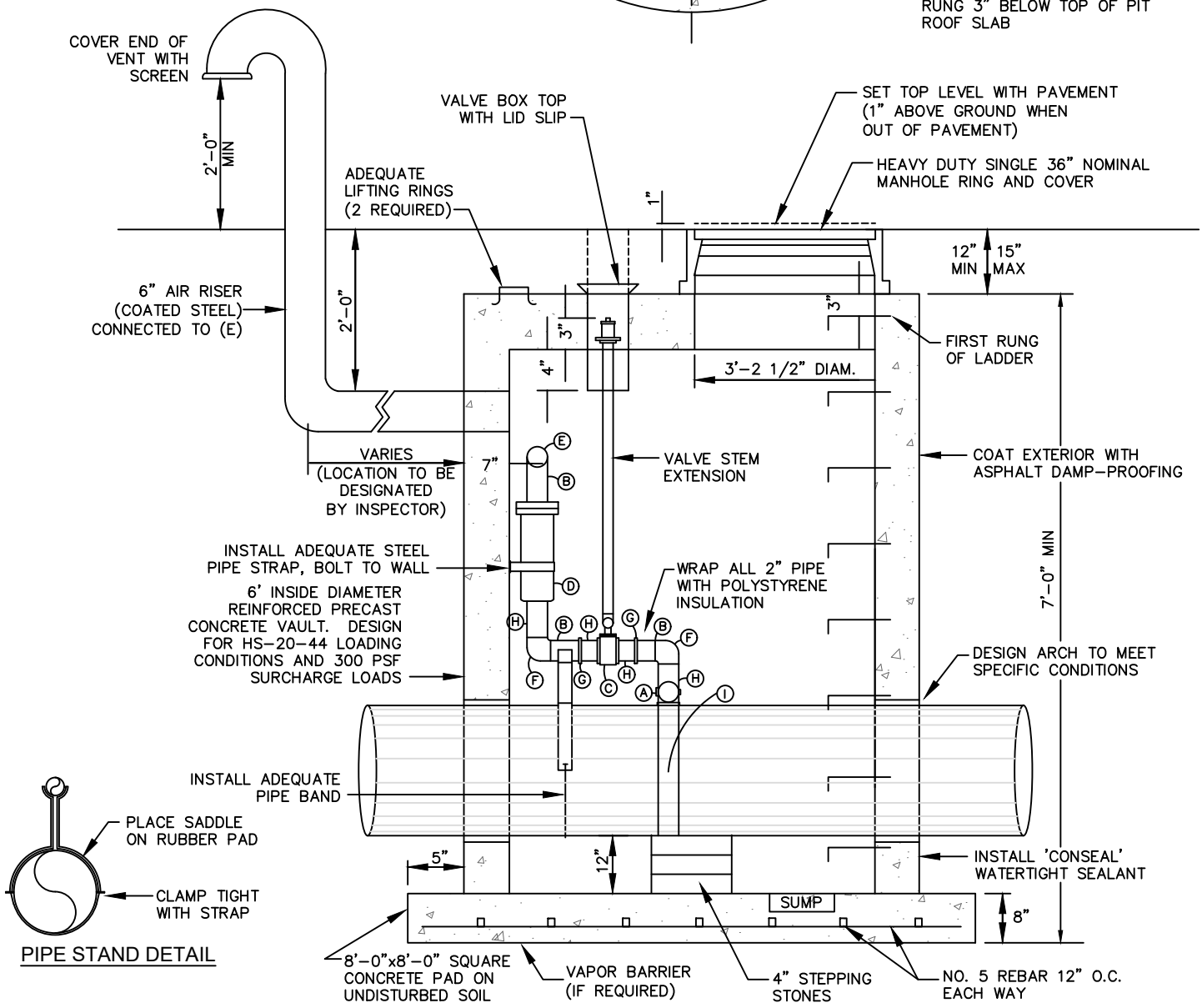

PIPE STAND DETAIL

AIR/VAC PRESSURE VALVE PIT

Drawn: GGM	Revised: DECEMBER 2021	PAONIA COLORADO	W–45
Date: JANUARY 2026	Revised:		
Scale: N.T.S.	Revised:		

Standard Drawings – Wastewater

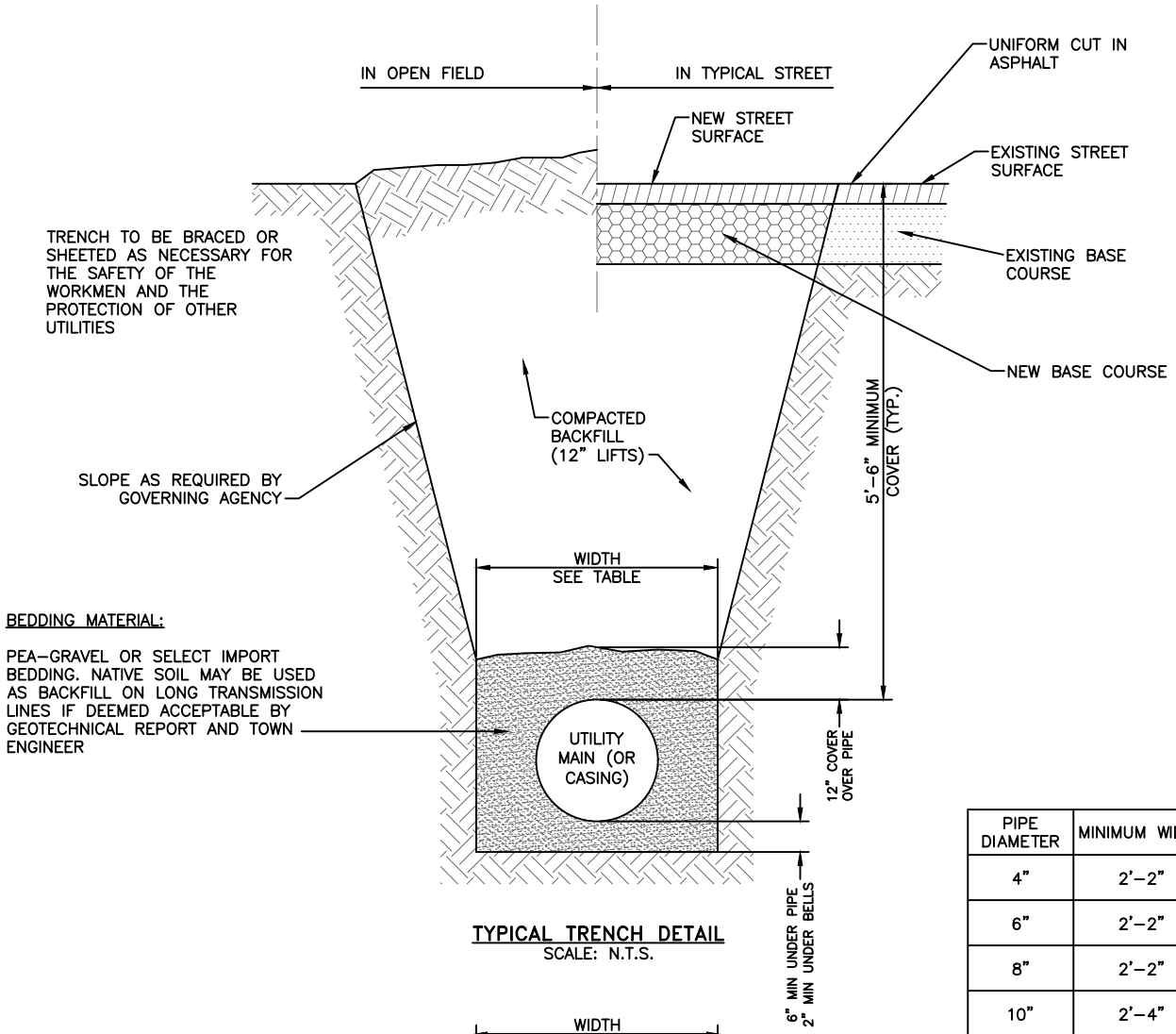

TYPICAL TRENCH DETAIL
SCALE: N.T.S.

PIPE DIAMETER	MINIMUM WIDTH	MAXIMUM WIDTH
4"	2'-2"	3'-0"
6"	2'-2"	3'-0"
8"	2'-2"	3'-0"
10"	2'-4"	3'-0"
12"	2'-6"	3'-6"
18"	2'-10"	3'-9"
24"	3'-2"	4'-3"

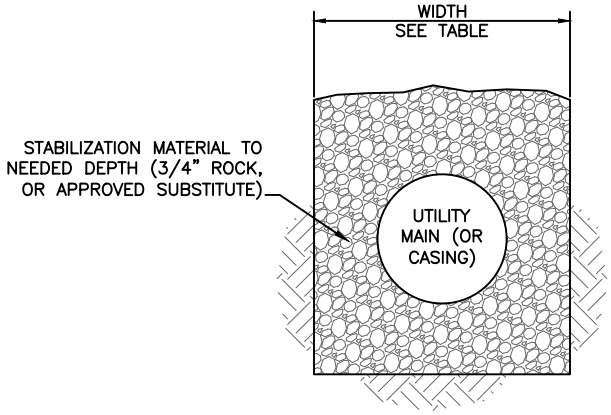

UNSTABLE TRENCH DETAIL
SCALE: N.T.S.

NOTE:

1. AN OVER-EXCAVATED TRENCH SHALL BE REFILLED WITH BEDDING MATERIAL AND THOROUGHLY COMPACTED AS PER THE SPECIFICATIONS.

TYPICAL TRENCH CROSS SECTION

Drawn: TMM	Revised:	PAONIA COLORADO	WW-1
Date: JANUARY 2026	Revised:		
Scale: N.T.S.	Revised:		

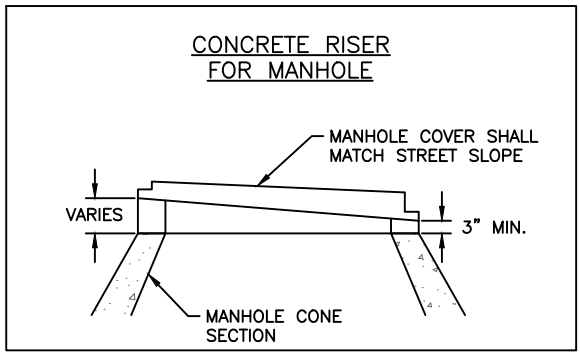

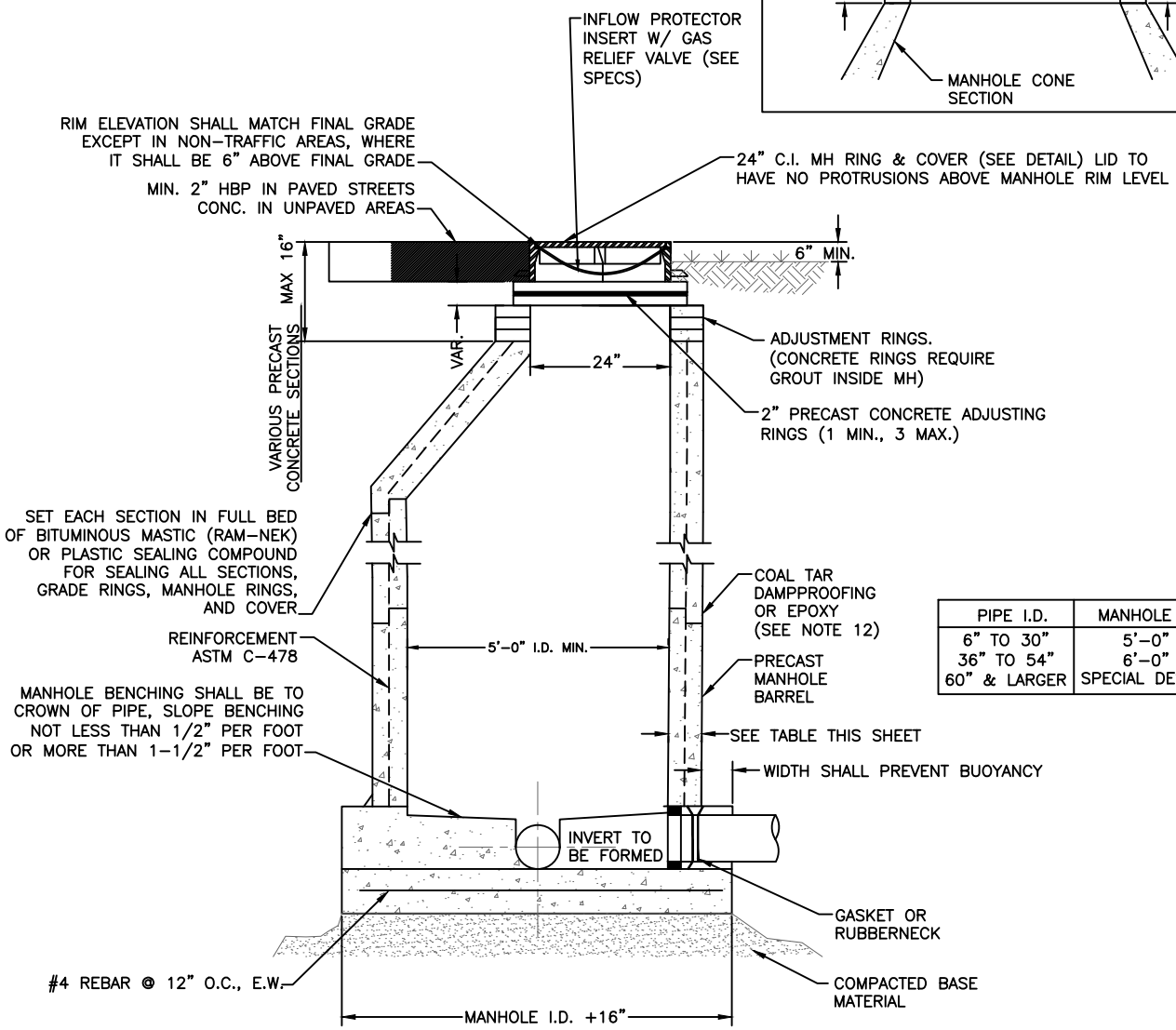

PIPE I.D.	MANHOLE I.D.	WALL
6" TO 30"	5'-0"	6"
36" TO 54"	6'-0"	7"
60" & LARGER	SPECIAL DESIGN	

NOTES:

1. ALL CONCRETE SHALL HAVE A MINIMUM COMPRESSIVE STRENGTH OF NOT LESS THAN 4,000 PSI @ 28 DAYS AND DESIGNED FOR HS-20 LOADING CONDITIONS.
2. ALL CONCRETE SHALL BE MECHANICALLY VIBRATED.
3. FOR CAST-IN-PLACE MANHOLES, DO NOT DROP CONCRETE A DISTANCE OF MORE THAN 5' UNLESS APPROVED BY THE DISTRICT.
4. 3/4" CRUSHED ROCK REQUIRED UNDER BASE TO A DEPTH OF 6" UP TO SPRINGLINE OF PIPE, 2'-3' RADIUS AROUND BASE.
5. ALL STEPS SHALL BE REMOVED FOLLOWING CONSTRUCTION.
6. STRUCTURAL REINFORCEMENT SHALL COMPLY TO ASTM C-478 AND SHALL BE STAMPED ON THE OUTSIDE OF THE MANHOLE.
7. SHAPING FOR SMOOTH MANHOLE INVERTS MUST BE DONE BY FORMING/SHAPING CONCRETE BASE.
8. PRECAST SECTIONS TO CONFORM TO ASTM C-478.
9. STUB-OUTS SHALL EXTEND A MINIMUM OF 6' PAST MANHOLE O.D. AND BE SATISFACTORILY PLUGGED.
10. CONCRETE MANHOLES MAY BE POURED IN PLACE ONLY WITH PRIOR DESIGN AND INSPECTION APPROVAL.
11. ALL MORTAR GROUT SHALL BE MIXED WITH TYPE V CEMENT.
12. APPLY COAL TAR EPOXY DAMP-PROOFING TO ALL EXTERIOR CONCRETE SURFACES.
13. CENTER REINF. IN BASE. POUR BELOW PIPE O.D. AT FL.
14. ALL EXTERIOR JOINTS SHALL RECEIVE BUTYL RUBBER JOINT WRAP. REFER TO SPECIFICATIONS.
15. MANHOLE RIMS SHALL HAVE A HOLE IN LIEU OF A NOTCH FOR REMOVAL.

PRECAST MANHOLE

Drawn: TMM	Revised:	PAONIA COLORADO	WW-2
Date: JANUARY 2026	Revised:		
Scale: N.T.S.	Revised:		

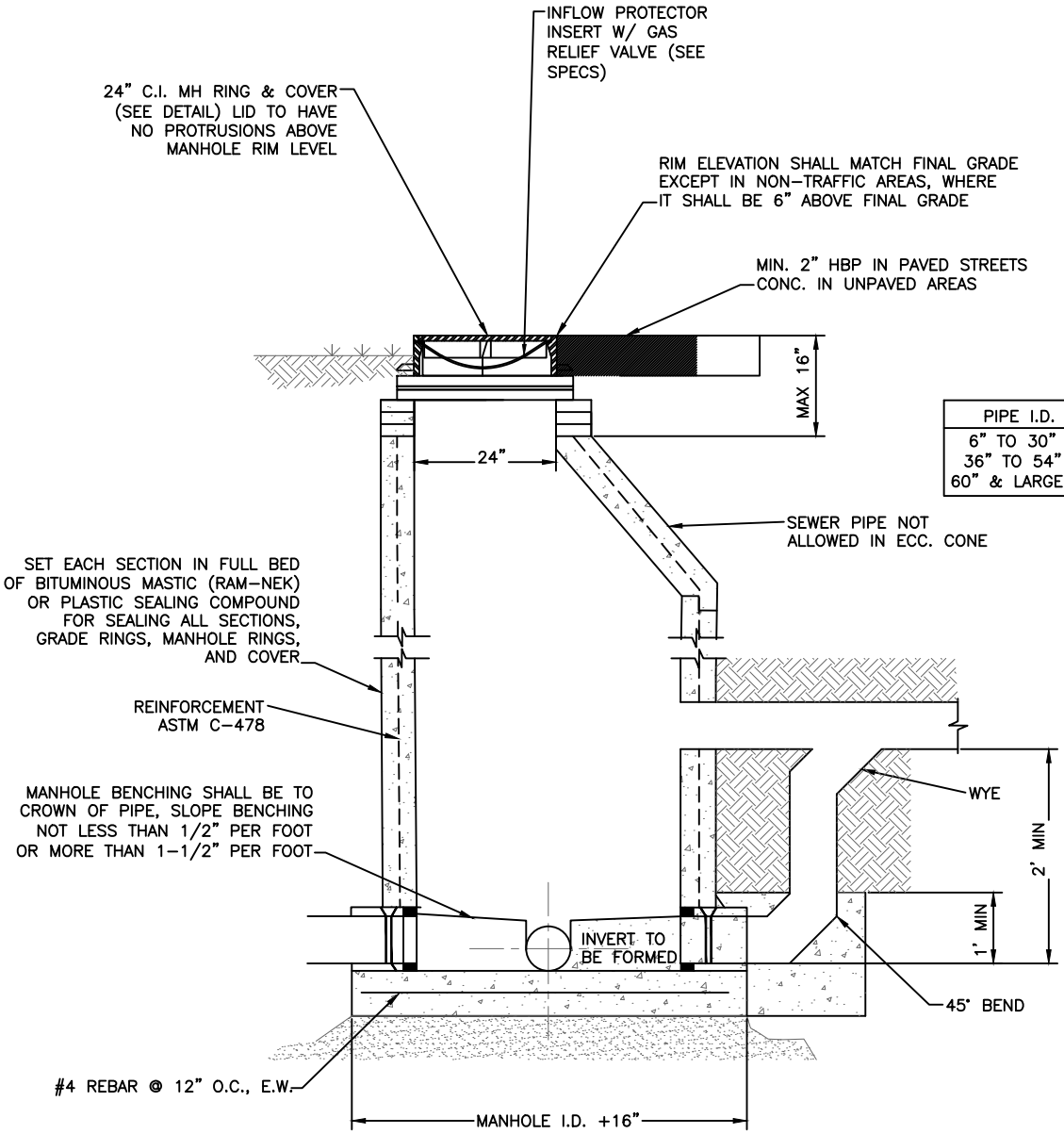

PIPE I.D.	MANHOLE I.D.	WALL
6" TO 30"	5'-0"	6"
36" TO 54"	6'-0"	7"
60" & LARGER	SPECIAL DESIGN	

NOTES:

1. ALL CONCRETE SHALL HAVE A MINIMUM COMPRESSIVE STRENGTH OF NOT LESS THAN 4,000 PSI @ 28 DAYS AND DESIGNED FOR HS-20 LOADING CONDITIONS.
2. ALL CONCRETE SHALL BE MECHANICALLY VIBRATED.
3. FOR CAST-IN-PLACE MANHOLES, DO NOT DROP CONCRETE A DISTANCE OF MORE THAN 5' UNLESS APPROVED BY THE DISTRICT.
4. 3/4" CRUSHED ROCK REQUIRED UNDER BASE TO A DEPTH OF 6" UP TO SPRINGLINE OF PIPE, 2'-3' RADIUS AROUND BASE.
5. ALL STEPS SHALL BE REMOVED FOLLOWING CONSTRUCTION.
6. STRUCTURAL REINFORCEMENT SHALL COMPLY TO ASTM C-478 AND SHALL BE STAMPED ON THE OUTSIDE OF THE MANHOLE.
7. SHAPING FOR SMOOTH MANHOLE INVERTS MUST BE DONE BY FORMING/SHAPING CONCRETE BASE.
8. PRECAST SECTIONS TO CONFORM TO ASTM C-478.
9. STUB-OUTS SHALL EXTEND A MINIMUM OF 6' PAST MANHOLE O.D. AND BE SATISFACTORILY PLUGGED.
10. CONCRETE MANHOLES MAY BE POURED IN PLACE ONLY WITH PRIOR DESIGN AND INSPECTION APPROVAL.
11. ALL MORTAR GROUT SHALL BE MIXED WITH TYPE V CEMENT.
12. APPLY COAL TAR EPOXY DAMP-PROOFING TO ALL EXTERIOR CONCRETE SURFACES.
13. CENTER REINF. IN BASE. POUR BELOW PIPE O.D. AT FL.
14. ALL EXTERIOR JOINTS SHALL RECEIVE BUTYL RUBBER JOINT WRAP. REFER TO SPECIFICATIONS.
15. MANHOLE RIMS SHALL HAVE A HOLE IN LIEU OF A NOTCH FOR REMOVAL.

OUTSIDE DROP MANHOLE

Drawn: TMM	Revised:	PAONIA COLORADO	WW-3
Date: JANUARY 2026	Revised:		
Scale: N.T.S.	Revised:		

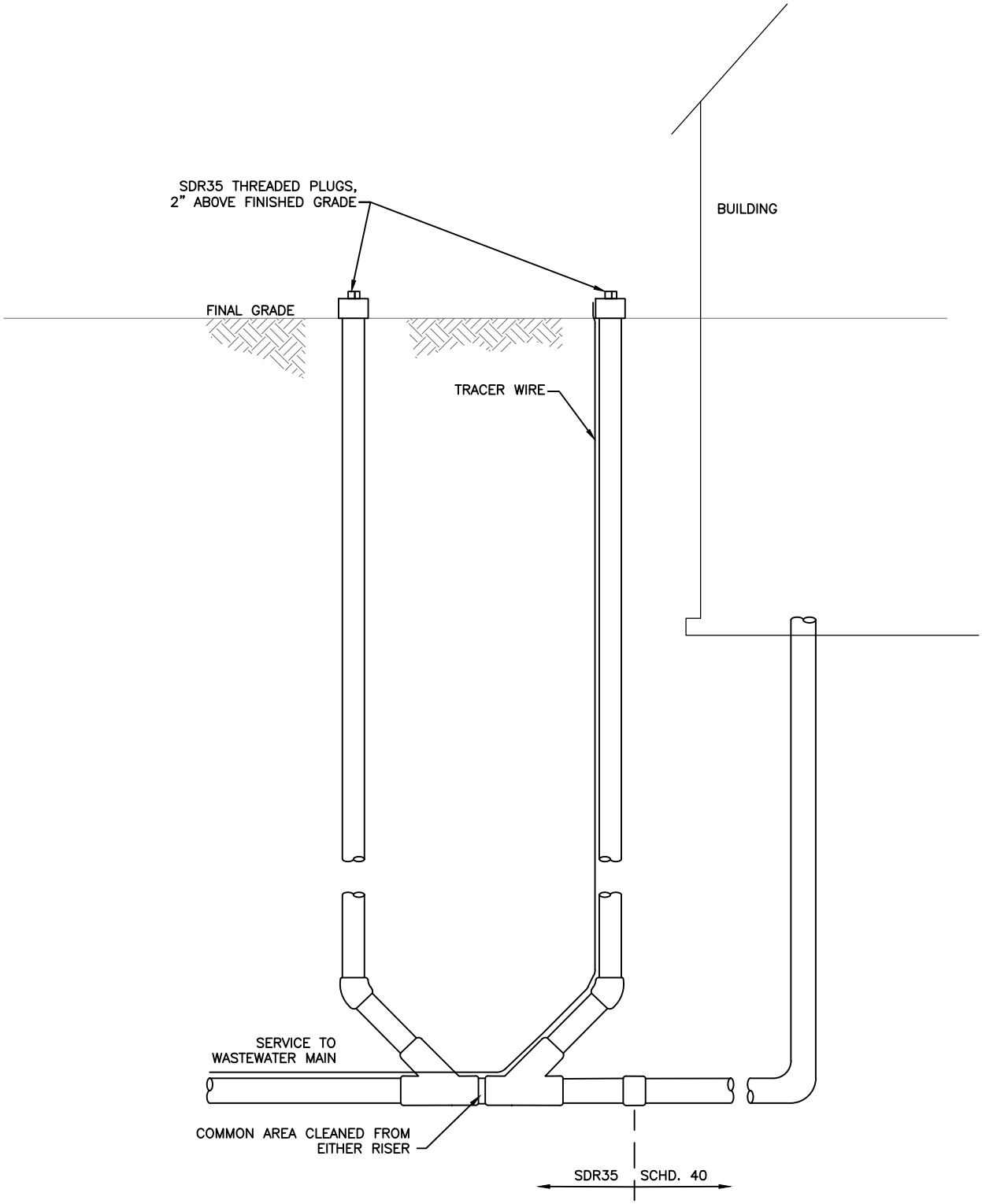

NOTES:

1. THE DIAMETER OF THE WASTEWATER SERVICE LINE SHALL NOT BE GREATER THAN 8 INCHES.
2. THE MAXIMUM DEPTH OF THE WASTEWATER SERVICE LINE SHALL NOT BE GREATER THAN 14 FEET MEASURED FROM FINAL GRADE TO THE WASTEWATER PIPE INVERT.

RESIDENTIAL SEWER TWO-WAY CLEANOUT

Drawn: TMM	Revised:	PAONIA COLORADO	WW-4
Date: JANUARY 2026	Revised:		
Scale: N.T.S.	Revised:		

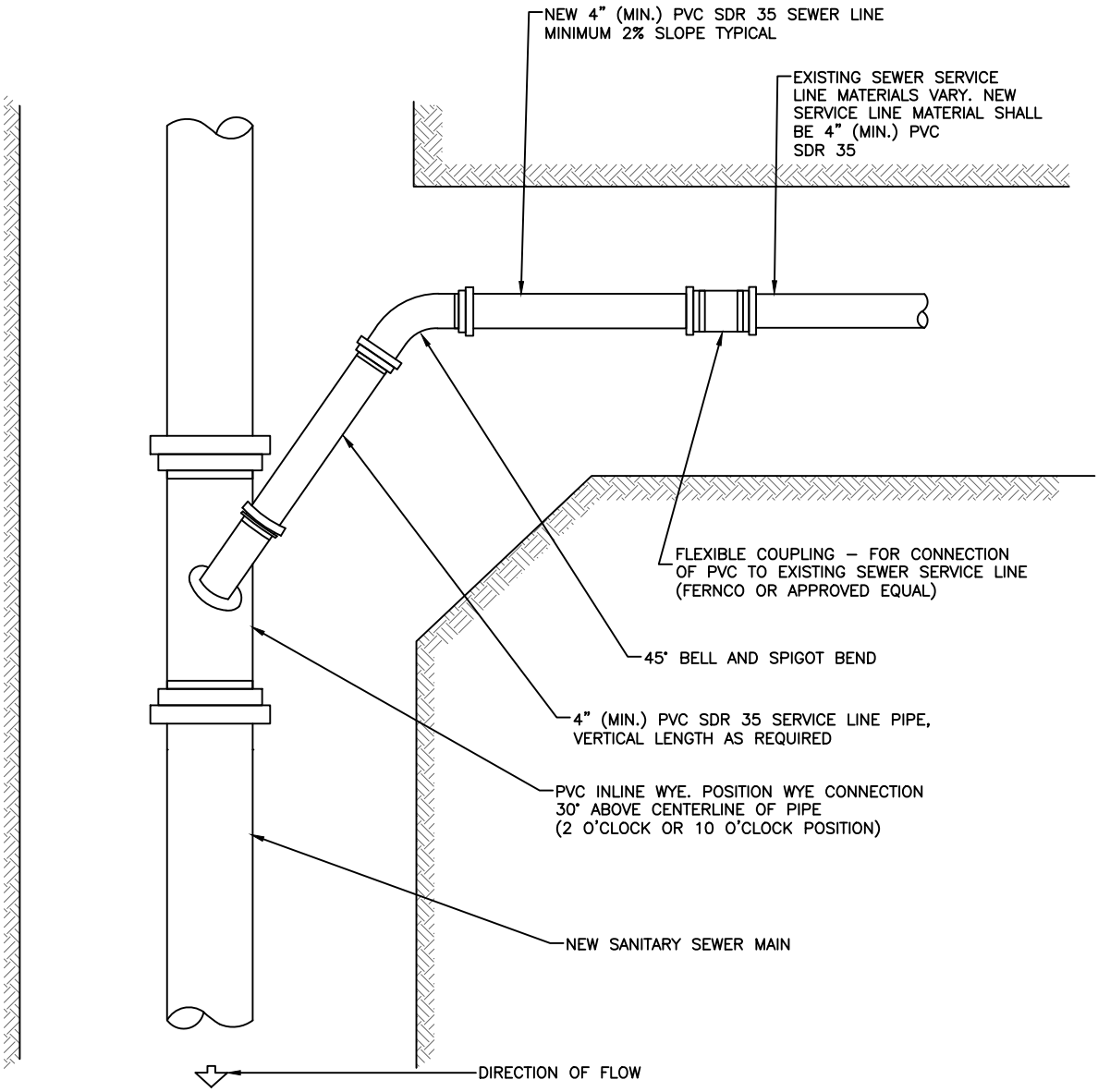

SANITARY SEWER SERVICE CONNECTION

Drawn: TMM	Revised:		PAONIA COLORADO	WW–5
Date: JANUARY 2026	Revised:			
Scale: N.T.S.	Revised:			

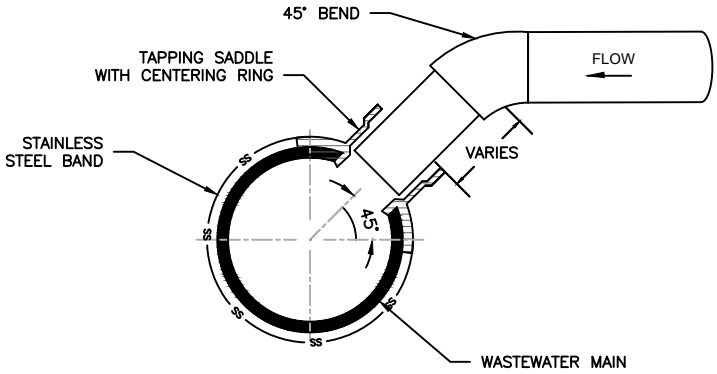

TYPICAL WASTEWATER SERVICE TAPPING SADDLE

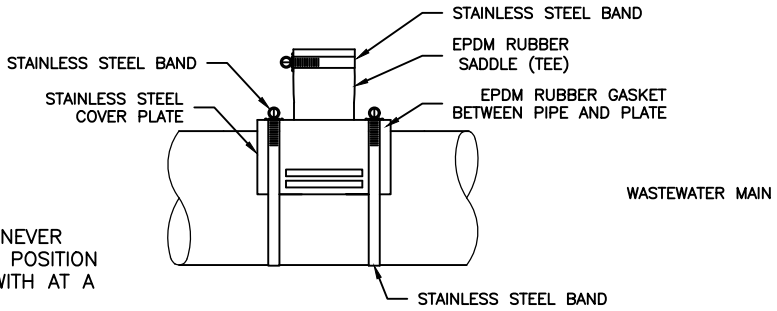

RUBBER GASKET SADDLE - 4" & 6"

TAPPING SADDLE NOTES:

1. WASTEWATER MAIN TAPES SHOULD NEVER ENTER THE MAIN AT THE 12 O'CLOCK POSITION ON THE PIPE. TAPS MUST BE MADE WITH AT A MINIMUM ANGLE OF 30°.

RUBBER GASKET NOTE:

1. ALL ELASTOMERIC SEALS (RUBBER GASKETS) SHALL COMPLY WITH ASTM F477.
2. PIPE WILL BE CUT WITH AN O.D. HOLE SAW OR TAPPING MACHINE. A 4–1/2" O.D. HOLE SAW SHALL BE USED FOR 4" TAPS AND A 6–1/2" O.D. HOLE SAW SHALL BE USED FOR 6" TAPS.

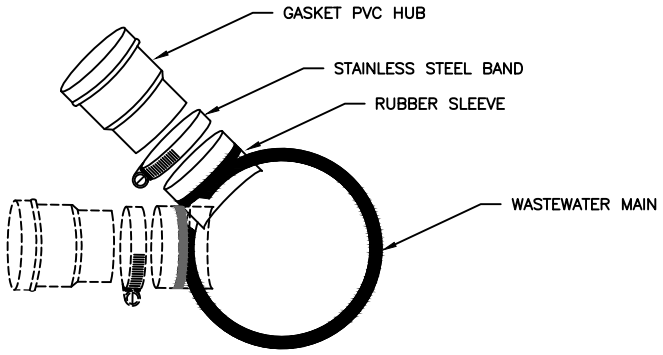

3 PIECE TAP NOTES:

1. 3 PIECE TAPS MAY BE ALLOWED ON WASTEWATER MAINS WITH APPROVAL FROM TOWN ENGINEER. 3 PIECE TAPS SHOULD ONLY BE USED FOR WASTEWATER MAINS GREATER THAN 12".
2. THE CONTRACTOR SHALL ENSURE THAT THE CORRECT 3 PIECE TAP HAS BEEN ORDERED TO FIT THE MATERIAL AND DIAMETER OF THE MAIN AND THE MATERIAL AND DIAMETER OF THE TAP. THE 3 PIECE TAP SHALL BE PROVIDED TO THE INSPECTOR FOR APPROVAL PRIOR TO INSTALLATION.
3. 3 PIECE TAPS FOR WASTEWATER MAINS 12" AND LESS WILL REQUIRE THAT THE SERVICE BE CCTV'D AFTER BACKFILL OF THE SERVICE LINE. IF THE INSERT PROTRUDES INTO THE WASTEWATER MAIN GREATER THAN 1/4", THEN THE TAP WILL BE REJECTED AND WILL NEED TO BE REMOVED, REINSTALLED AND RE–CCTV'D.

SANITARY SEWER SERVICE CONNECTION TO EXISTING MAIN DETAIL

Drawn: TMM	Revised:		PAONIA COLORADO	WW–6
Date: JANUARY 2026	Revised:			
Scale: N.T.S.	Revised:			

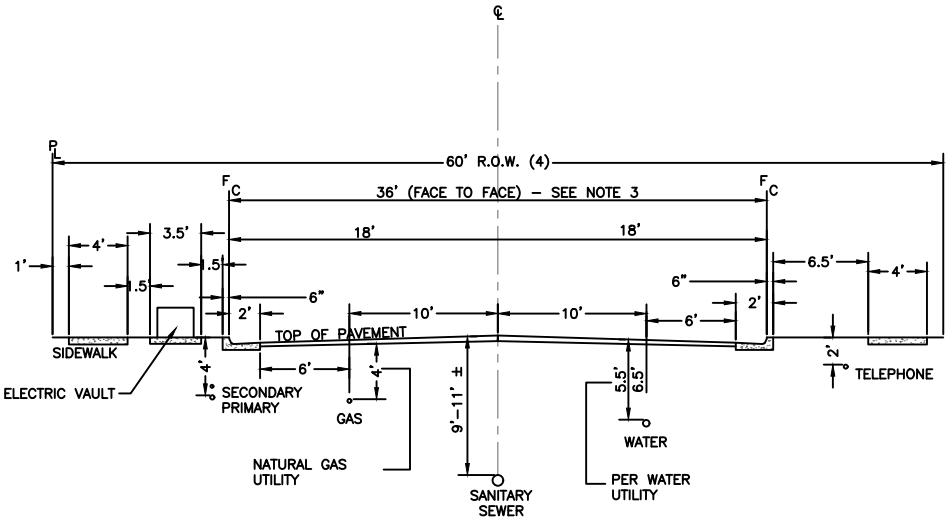

TYPICAL CROSS SECTION
UTILITIES LOCATION

GENERAL NOTES

1. STORM SEWERS SHALL MAINTAIN A 10' CLEAR SEPARATION FROM WATER.
2. ELECTRIC CONDUITS SHALL BE ON THE OPPOSITE SIDE OF THE STREET FROM WATER.
3. FOR 40'–WIDE STREET SECTIONS, MAINTAIN WATER 10 FEET FROM SANITARY SEWER AT STREET CENTERLINE.
4. FOR 50'–WIDE RIGHT–OF–WAY (ROW), A 5'–WIDE SIDEWALK AND UTILITY EASEMENTS ARE REQUIRED ADJACENT TO THE STREET ROW. FIVE FOOT (5') WIDE ATTACHED SIDEWALK IS USED WITH ELECTRIC UTILITIES BEHIND WALK–IN EASEMENT.

TYPICAL UTILITY LOCATIONS

Drawn: JANUARY 2026	Revised:	PAONIA COLORADO	WW–7
Date: FEBRUARY 2025	Revised:		
Scale: N.T.S.	Revised:		

PAGE IS LEFT BLANK INTENTIONALLY

PIPE BRIDGING DETAIL

Drawn: TMM	Revised:	PAONIA COLORADO	WW-8
Date: JANUARY 2026	Revised:		
Scale: N.T.S.	Revised:		

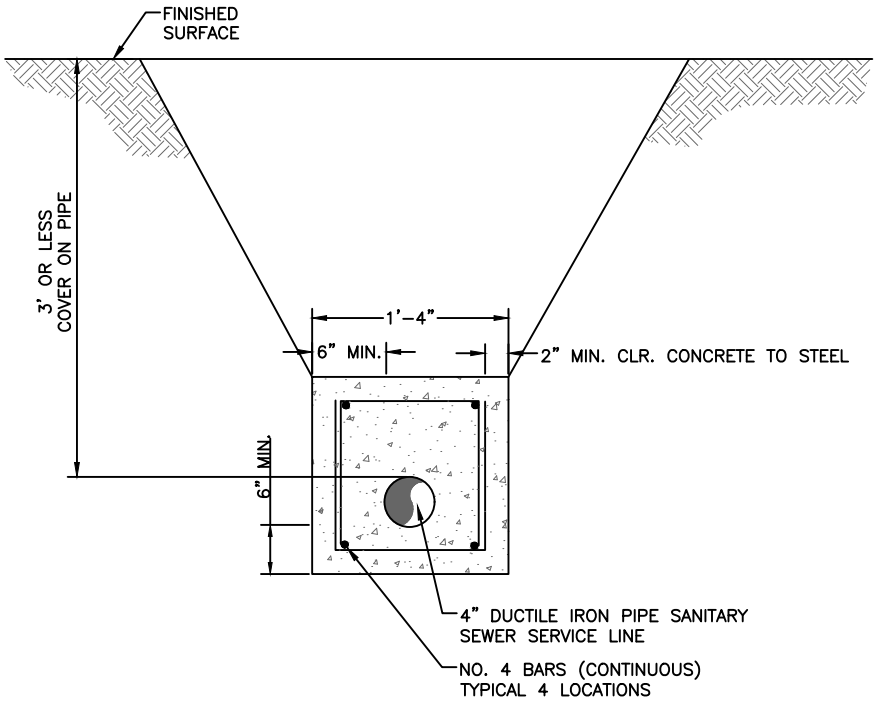

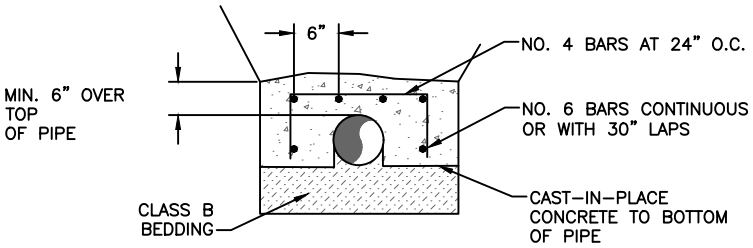

REINFORCED CONCRETE PIPE CAP

NOTES:

1. DUCTILE IRON PIPE WITHOUT CONCRETE ENCASEMENT MAY BE PERMITTED BY THE DISTRICT IF FINAL PIPE COVER IS MORE THAN 3 FEET.
2. CONCRETE ENCASEMENT PER THIS DRAWING IS REQUIRED WITH DUCTILE IRON PIPE WHERE FINAL PIPE COVER IS 3 FEET OR LESS.
3. IF THE CONCRETE ENCASEMENT IS REQUIRED ON A SANITARY SEWER SERVICE LINE, THE PROPERTY OWNER/CUSTOMER IS COMPLETELY RESPONSIBLE FOR OPERATION, MAINTENANCE, AND REPLACEMENT OF ANY SEWER SERVICE LINE FROM THE DISTRICT'S SEWER MAIN TO THE STRUCTURE SERVED.
4. THE TOWN MAY ACCEPT CONCRETE CAP FOR PIPE PROTECTION IN SPECIAL CONDITIONS.
5. WRAP PIPE WITH PIPE INSULATION TO A THICKNESS OF ONE (1) INCH.

SHALLOW SANITARY SEWER LINE PROTECTION/ENCASEMENT

Drawn: TMM	Revised:	PAONIA COLORADO	WW-9
Date: JANUARY 2026	Revised:		
Scale: N.T.S.	Revised:		

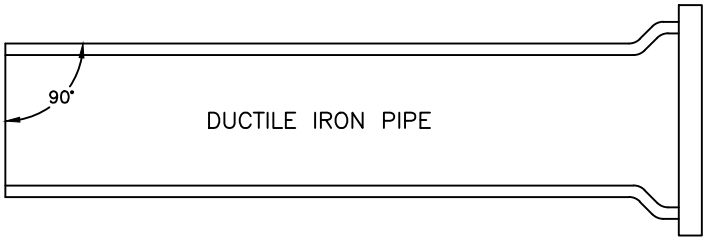

MECHANICAL JOINT CONNECTION

PIPE MUST BE CUT AT RIGHT ANGLES TO LONGITUDINAL CENTERLINE IN ALL CASES.

PIPE ENDS SHALL BE FREE OF BURRS.

MORTAR LINING SHALL BE FLUSH WITH PIPE END.

GOUGES CUT IN PIPE ENDS SHALL NOT BE ALLOWED.

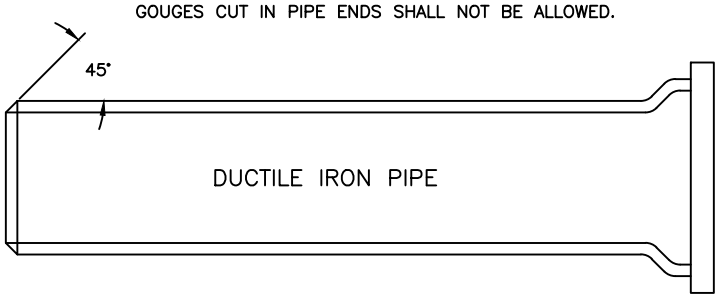

SLIP JOINT CONNECTION

PIPE CUT IN STRAIGHT LINE AND BEVELED AT 45° ANGLE ON END.

GENERAL NOTES:

1. ALL PIPE–CUTTING EQUIPMENT AND PIPE CUTS MUST BE APPROVED BY THE WATER AND SANITATION DISTRICT INSPECTOR.
2. ALL PIPE ENDS TO BE USED IN INSTALLATION SHALL BE DRESSED SMOOTH TO THE SATISFACTION OF THE INSPECTOR PRIOR TO INSTALLATION.
3. AT THE REQUEST OF THE CONTRACTOR MAKING THE INSTALLATION, THE DISTRICT WILL MAKE PIPE CUTS, PROVIDING THE CURRENT FEE PER CUT IS PAID AND 24–HOUR NOTICE IS GIVEN (THE CURRENT FEE IS SUBJECT TO CHANGE).
4. ALL DIP DELIVERED TO JOB SITE MUST BE NEW MATERIAL.

PIPE CUTTING

Drawn: TMM	Revised:	PAONIA COLORADO	WW–10
Date: JANUARY 2026	Revised:		
Scale: N.T.S.	Revised:		

FIELD INSTALLATION OF POLYETHYLENE WRAP

STEP 1:

PLACE TUBE OF POLYETHYLENE MATERIAL ON PIPE PRIOR TO LOWERING IT INTO TRENCH.

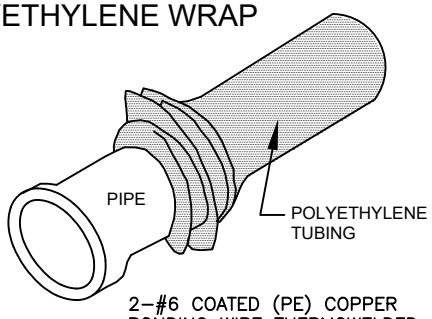

STEP 2:

PULL TUBE OVER THE LENGTH OF THE PIPE. TAPE TUBE TO END AT JOINT. FOLD MATERIAL AROUND THE ADJACENT SPIGOT END AND WRAP WITH TAPE TO HOLD THE PLASTIC TUBE IN PLACE. INSTALL BONDING STRAP OR WIRE AT EVERY JOINT OF PIPE PRIOR TO WRAPPING AS PER SECTION 7.10 OF THE STANDARD SPECIFICATIONS.

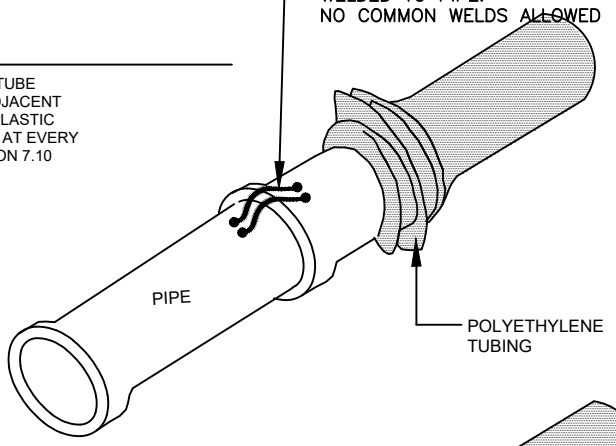

STEP 3:

OVERLAP FIRST TUBE WITH ADJACENT TUBE AND SECURE WITH PLASTIC ADHESIVE TAPE. THE POLYETHYLENE TUBE MATERIAL COVERING THE PIPE SHALL BE LOOSE. EXCESS MATERIAL SHALL BE NEATLY DRAWN UP AROUND THE PIPE BARREL, FOLDED ON TOP OF PIPE, AND TAPED IN PLACE.

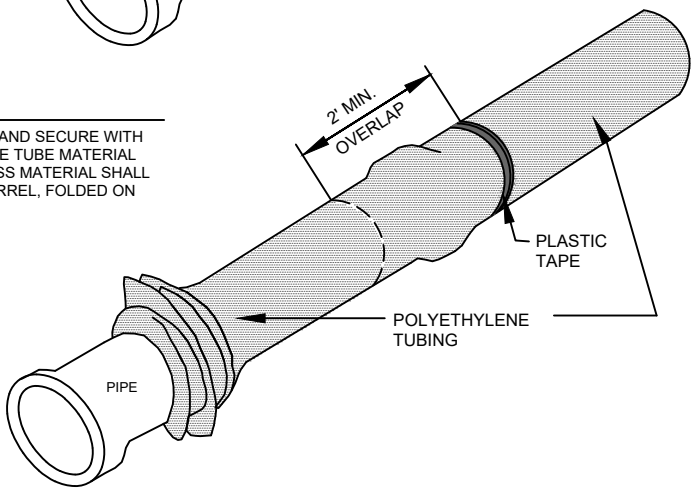

POLYETHYLENE PIPE WRAP

Drawn: TMM	Revised:	PAONIA COLORADO	WW–11
Date: JANUARY 2026	Revised:		
Scale: N.T.S.	Revised:		

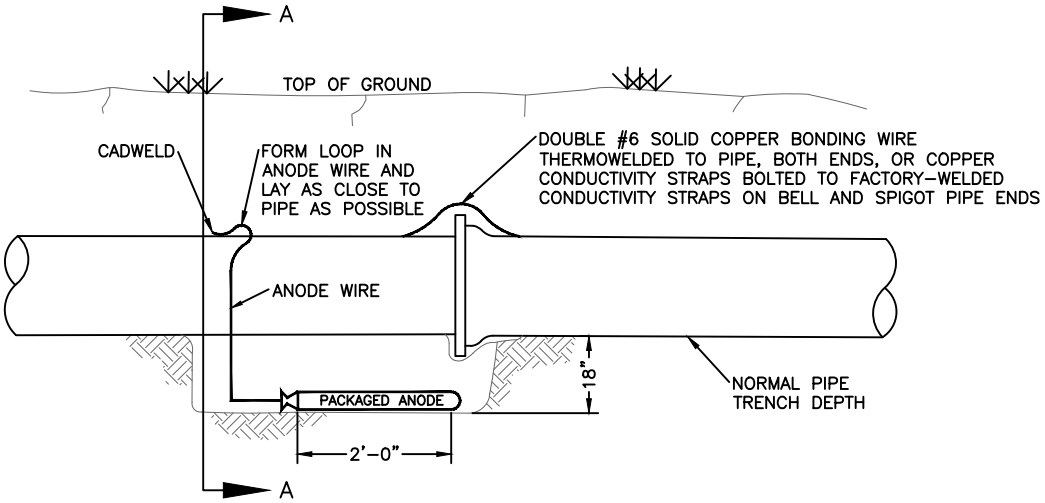

ELEVATION

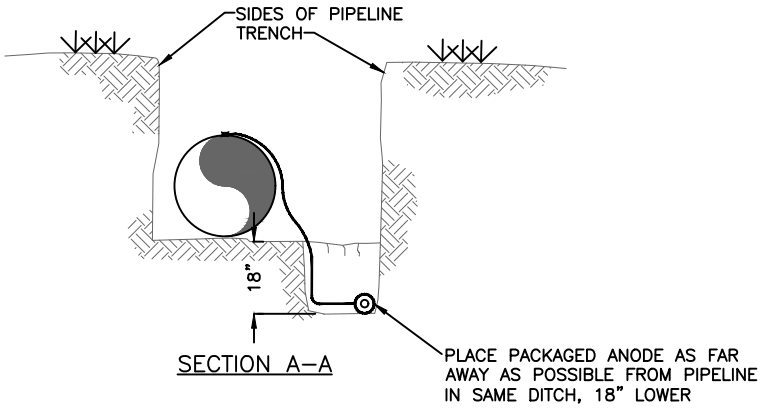

SECTION A–A

NOTES:

1. CADWELD CONNECTION TO BE PRIMED AND COATED CAREFULLY. PACKAGED ANODE SHOULD BE COVERED WITH FINE SOIL CONTAINING NO ROCKS OR DIRT CLUMPS, TAMPED.
2. WHEN ANODES ARE REQUIRED WITH METAL FITTINGS AND APPURTENANCES TOGETHER WITH PVC PIPE INSTALLATION, THE ANODES SHALL BE PLACED AND ATTACHED TO THE METAL IN SAME MANNER AS SHOWN ON THIS DRAWING. 9 LB. ANODES CAN BE USED ON METAL FITTINGS 12" AND LESS IN DIAMETER AND 17 LB. ANODES FOR METAL FITTINGS GREATER THAN 12" DIAMETER WHEN USING PVC PIPE.
3. PACKAGED ANODE TO BE WETTED AND COVERED WITH SOIL PRIOR TO BACKFILLING.

BONDING JOINT & ANODE INSTALLATION

Drawn: TMM	Revised:		PAONIA COLORADO	WW–12
Date: JANUARY 2026	Revised:			
Scale: N.T.S.	Revised:			

MAXIMUM DEFLECTION
PER SLIP JOINT OF D.I.P.

PIPE DIAMETER			MFRS. DEFL.	DESIGN DEFLECTION (80% MAX.)			APPROX. RADIUS FOR DEFLECTING CURVES WITHOUT BENDS	
I.D. (IN)	O.D. (IN)	O.D. (FT)			MAX. DEFL. DIST. (1)	MAX. DEFL. DIST. (2)	20'L	18'L
4"	4.80"	.400'	5°00'00"	4°00'00"	16"	15"	286'	258'
6"	6.90"	.575'	5°00'00"	4°00'00"	16"	15"	286'	258'
8"	9.05"	.754'	5°00'00"	4°00'00"	16"	15"	286'	258'
10"	11.10"	.925'	5°00'00"	4°00'00"	16"	15"	286'	258'
12"	13.20"	1.100'	5°00'00"	4°00'00"	16"	15"	286'	258'
14"	15.30"	1.275'	3°00'00"	2°24'00"	10"	9"	477'	430'
16"	17.40"	1.450'	3°00'00"	2°24'00"	10"	9"	477'	430'
18"	19.50"	1.625'	3°00'00"	2°24'00"	10"	9"	477'	430'
20"	21.60"	1.800'	3°00'00"	2°24'00"	10"	9"	477'	430'
24"	25.80"	2.150'	3°00'00"	2°24'00"	10"	9"	477'	430'
30"	32.00"	2.666'	2°30'00"	2°00'00"	8"	7"	573'	516'
36"	38.30"	3.192'	2°00'00"	1°36'00"	6"	6"	716'	645'
42"	44.50"	3.708'	2°00'00"	1°36'00"	6"	6"	716'	645'

(1) 20'L = NORMAL 20-FOOT JOINT LAYING LENGTH
(2) 18'L = NORMAL 18-FOOT JOINT LAYING LENGTH

MAXIMUM PIPELINE DEFLECTION DATA

Drawn: TMM	Revised:	
Date: JANUARY 2026	Revised:	
Scale: N.T.S.	Revised:	

PAONIA COLORADO

WW-13

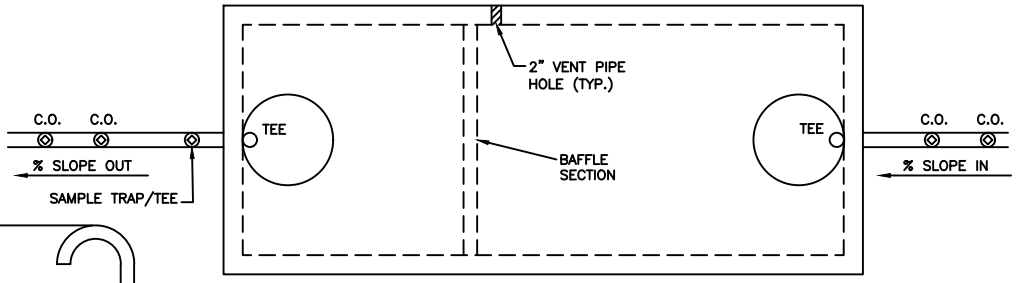

PLAN VIEW – TOP SECTION
N.T.S.

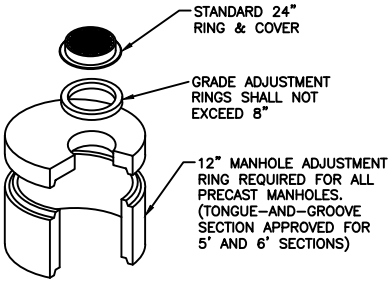

NOTE:
IF TOP OF GREASE INTERCEPTOR IS MORE THAN 8" BELOW FINISHED GRADE, 4" DIAMETER MANHOLE BARREL SECTION(S) WILL BE REQUIRED TO BRING RING AND COVER TO GRADE.

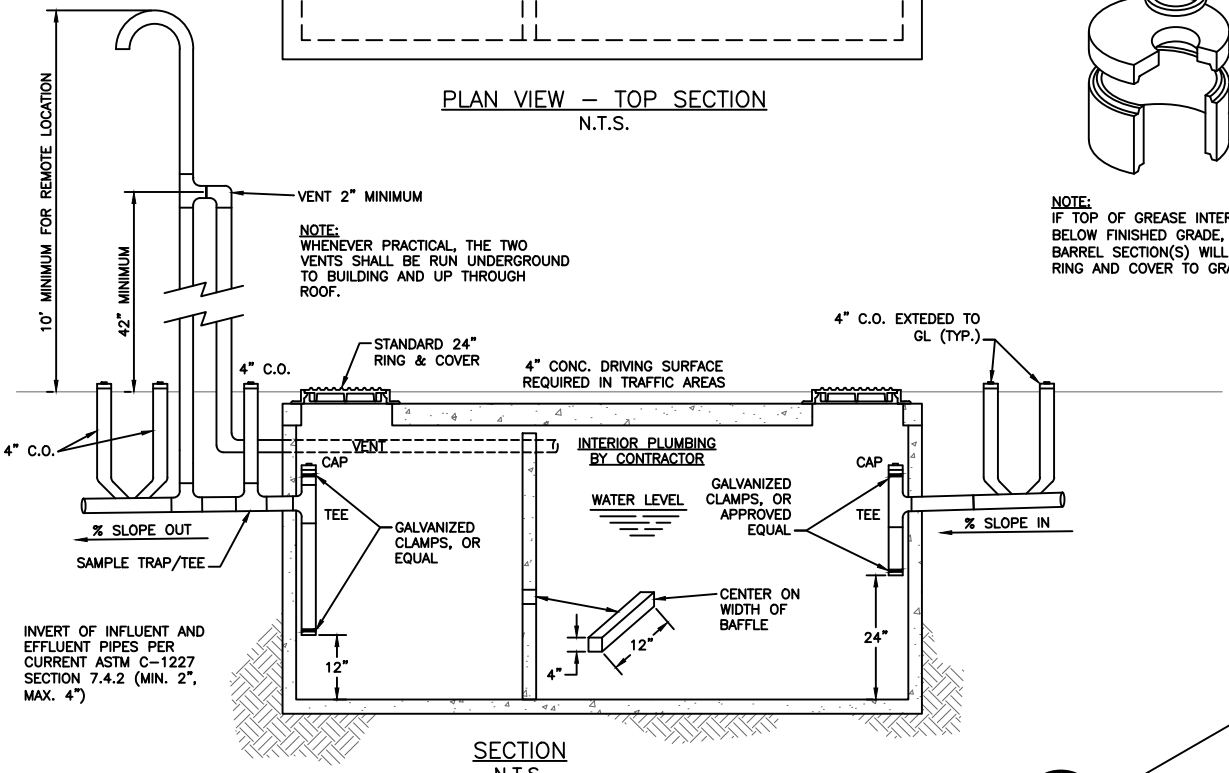

SECTION
N.T.S.

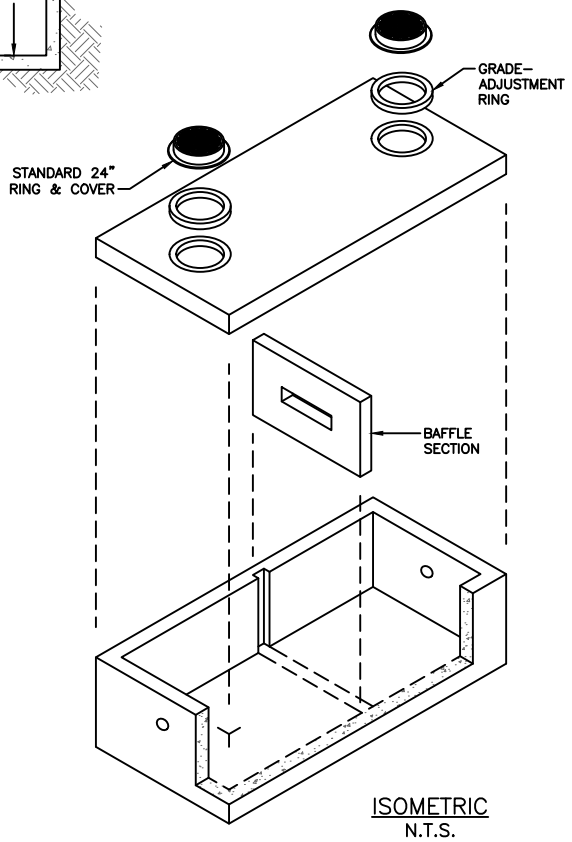

ISOMETRIC
N.T.S.

TYPICAL GREASE INTERCEPTORS

SIZE (GAL.)	USE	LENGTH	WIDTH	HEIGHT
800	NON–TRAFFIC	96"	48"	73"
1000	NON–TRAFFIC	102"	58"	73"
1000	TRAFFIC	96"	72"	87.5"
1500	NON–TRAFFIC	126"	68"	73"
1500	TRAFFIC	162"	84"	65"
2250	NON–TRAFFIC	144"	78"	79"
2500	TRAFFIC	162"	84"	103"
3500	TRAFFIC	162"	84"	103"
5000	TRAFFIC	162"	84"	147"

APPROX. SIZE OF GREASE INTERCEPTORS
CHECK WITH MANUFACTURER FOR CORRECT DIMENSIONS AND INVERTS

NOTES:

1. TO BE READ IN CONJUNCTION WITH DISTRICT WASTEWATER SPECIFICATIONS AND INTERNATIONAL PLUMBING CODE.
2. SPECIFIC SIZE APPLICATION OF THE GREASE INTERCEPTOR TO BE DETERMINED BY DISTRICT.

GREASE INTERCEPTOR

Drawn: TMM	Revised:	PAONIA COLORADO	WW–14
Date: JANUARY 2026	Revised:		
Scale: N.T.S.	Revised:		

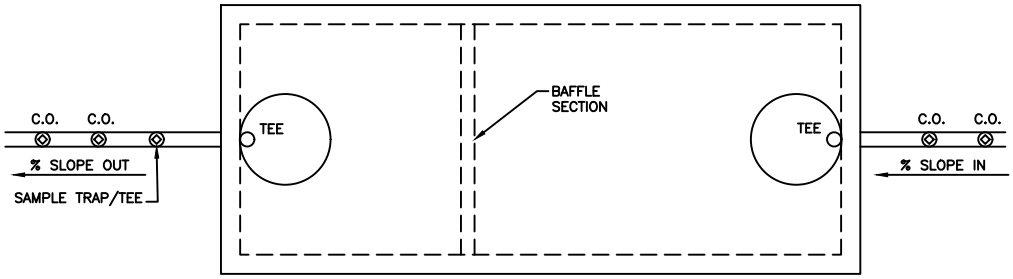

PLAN VIEW – TOP SECTION
N.T.S.

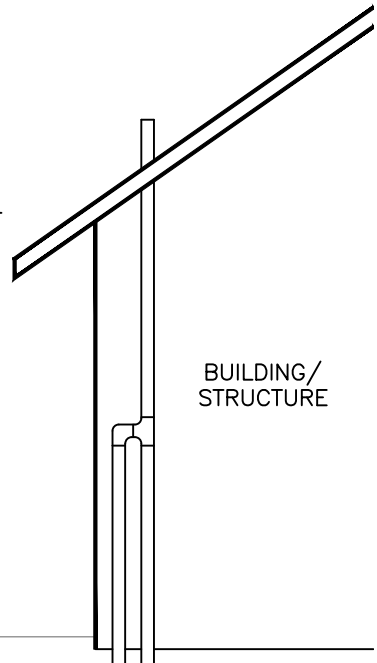

NOTE:
IF TOP OF GREASE INTERCEPTOR IS MORE THAN 8" BELOW FINISHED GRADE, 4" DIAMETER MANHOLE BARREL SECTION(S) WILL BE REQUIRED TO BRING RING AND COVER TO GRADE.

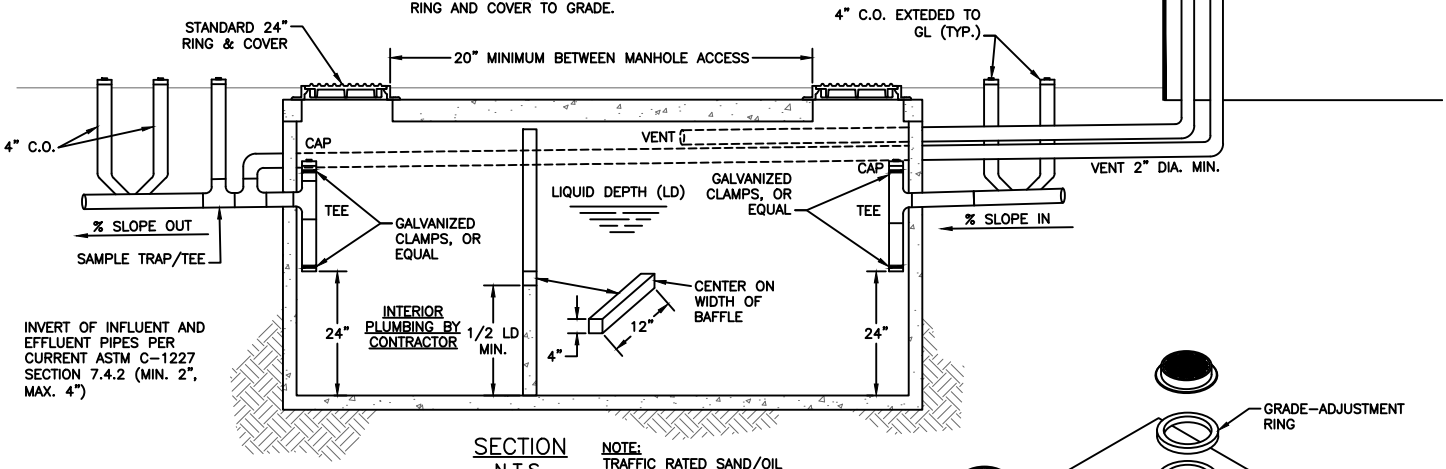

SECTION
N.T.S.

NOTE:
TRAFFIC RATED SAND/OIL INTERCEPTOR HAS A FULL BAFFLE SECTION (SEE DETAIL BELOW)

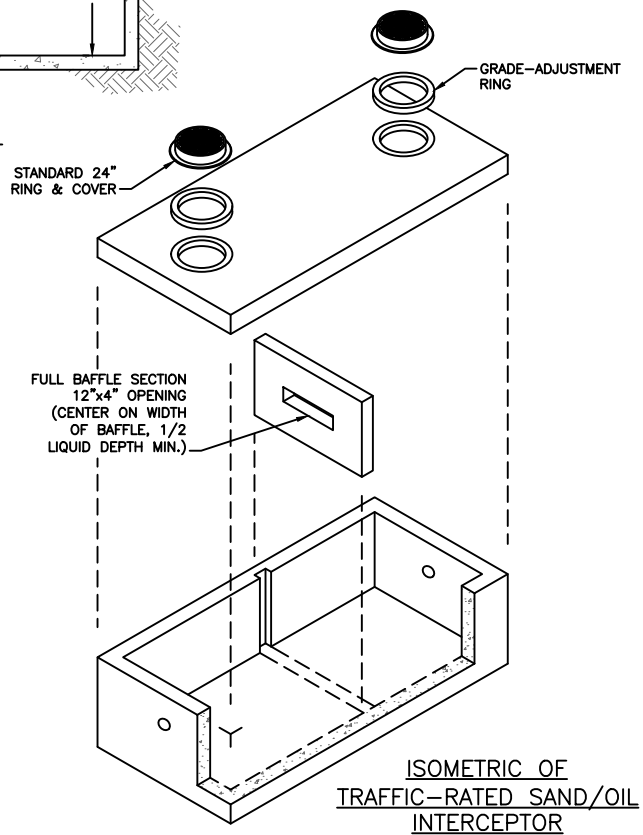

ISOMETRIC OF TRAFFIC-RATED SAND/OIL INTERCEPTOR
N.T.S.

TYPICAL SAND/OIL INTERCEPTORS

SIZE (GAL.)	USE	LENGTH	WIDTH	HEIGHT
500	TRAFFIC	72" OD x 74" (ID=60")		
1000	NON-TRAFFIC	102"	58"	77"
1000	TRAFFIC	96"	72"	86"
1500	NON-TRAFFIC	126"	68"	77"
1500	TRAFFIC	162"	84"	64"
2250	NON-TRAFFIC	144"	78"	82"
2500	TRAFFIC	162"	84"	102"

APPROX. SIZE OF SAND/OIL INTERCEPTORS
CHECK WITH MANUFACTURER FOR CORRECT DIMENSIONS AND INVERTS

NOTES:

1. TO BE READ IN CONJUNCTION WITH DISTRICT WASTEWATER SPECIFICATIONS AND INTERNATIONAL PLUMBING CODE.
2. SPECIFIC SIZE APPLICATION OF THE GREASE INTERCEPTOR TO BE DETERMINED BY DISTRICT.
3. INTERIOR PIPING TO BE STRAPPED AT BOTTOM WITH GALVANIZED CLAMPS, UNISTRUT, OR EQUAL.
4. VENTS SHALL BE CONSTRUCTED ON THE OUTSIDE OF THE TANK.

SAND/OIL INTERCEPTOR

Drawn: TMM	Revised:	PAONIA COLORADO	WW-15
Date: JANUARY 2026	Revised:		
Scale: N.T.S.	Revised:		

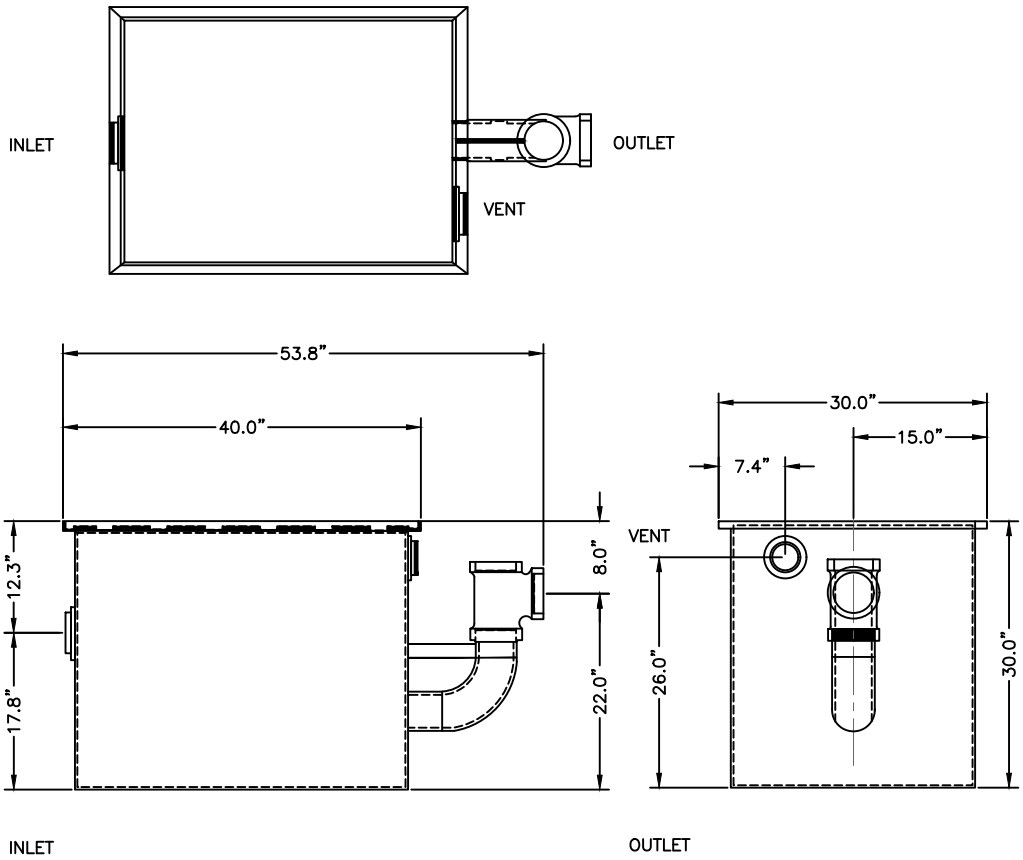

SPECIFICATIONS:

ALL WELDED ¼" STEEL SEPARATOR, 85-GALLON STATIC CAPACITY, 4.0" TAPPED INLET/OUTLET WITH 3.0" TAPPED INTERNAL VENT CONNECTION, 250 LBS GREASY SLUDGE CAPACITY, VISIBLE DOUBLE-WALL OUTSIDE TRAP SEAL, SEPARATOR PLATE AND REMOVABLE FILTER SCREEN, REMOVABLE ⅜" NONSKID DIAMOND TREADPLATE COVERS FOR FLUSH-WITH-FLOOR INSTALLATION SUITABLE FOR PEDESTRIAN TRAFFIC SECURED WITH STAINLESS FLAT HEAD SCREWS, HEAVY DUTY LEAK-PROOF GASKET, OPEX SHOP COAT COATING INSIDE AND BITUMINOUS COATING OUTSIDE. ROCKFORD MODEL GIS-50 OR APPROVED EQUIVALENT.

GREASE SEPARATOR = 250 LBS

Drawn: TMM	Revised:		PAONIA COLORADO	WW-16
Date: JANUARY 2026	Revised:			
Scale: N.T.S.	Revised:			

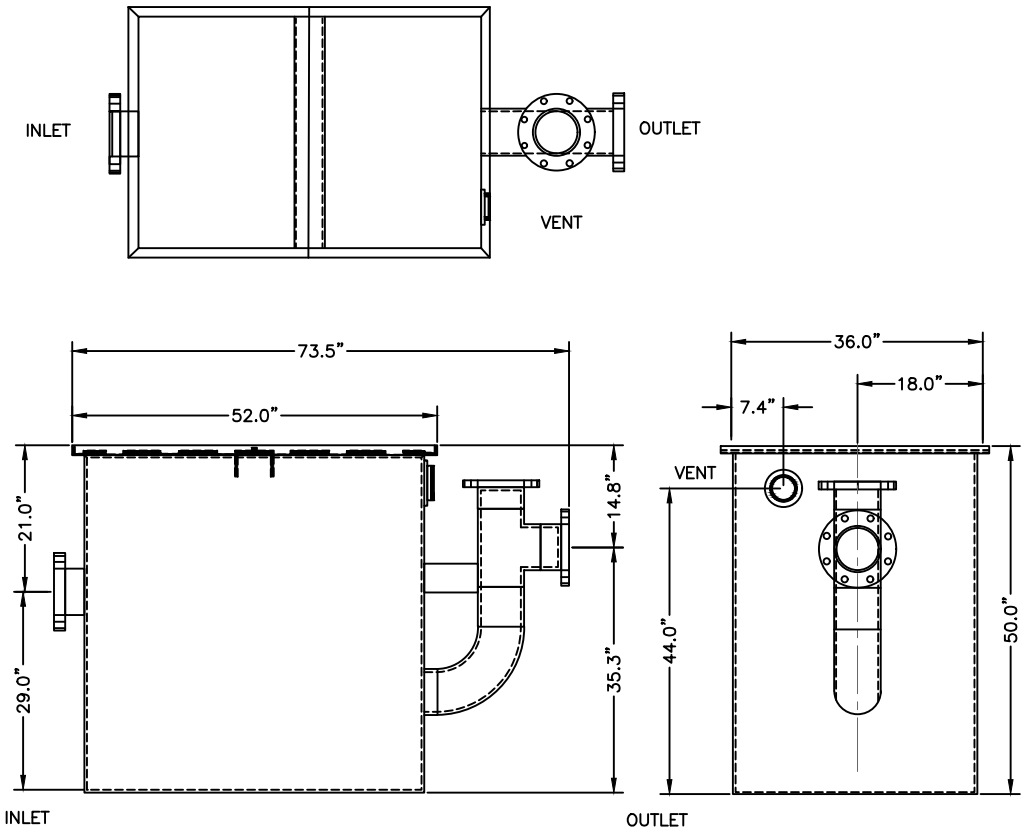

SPECIFICATIONS:

ALL WELDED ¼" STEEL SEPARATOR, 225-GALLON STATIC CAPACITY, 6.0" COMPANION FLANGE INLET/OUTLET WITH 3.0" TAPPED INTERNAL VENT CONNECTION, 500 LBS GREASY SLUDGE CAPACITY, VISIBLE DOUBLE-WALL OUTSIDE TRAP SEAL, SEPARATOR PLATE AND REMOVABLE FILTER SCREEN, REMOVABLE 3/5" NONSKID DIAMOND TREADPLATE COVERS FOR FLUSH-WITH-FLOOR INSTALLATION SUITABLE FOR PEDESTRIAN TRAFFIC SECURED WITH STAINLESS FLAT HEAD SCREWS, HEAVY DUTY LEAK-PROOF GASKET, OPEX SHOP COAT COATING INSIDE AND BITUMINOUS COATING OUTSIDE. ROCKFORD MODEL GIS-70 OR APPROVED EQUIVALENT.

GREASE SEPARATOR = 500 LBS

Drawn: TMM	Revised:		PAONIA COLORADO	WW-17
Date: JANUARY 2026	Revised:			
Scale: N.T.S.	Revised:			

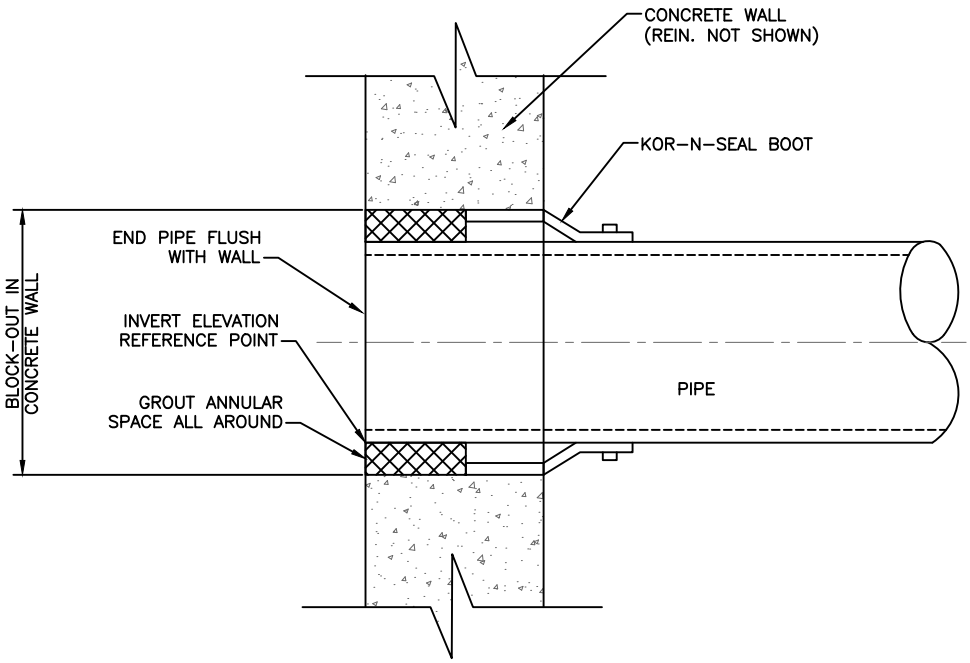

KOR-N-SEAL BOOT DETAIL

Drawn: TMM	Revised:	PAONIA COLORADO	WW-18
Date: JANUARY 2026	Revised:		
Scale: N.T.S.	Revised:		

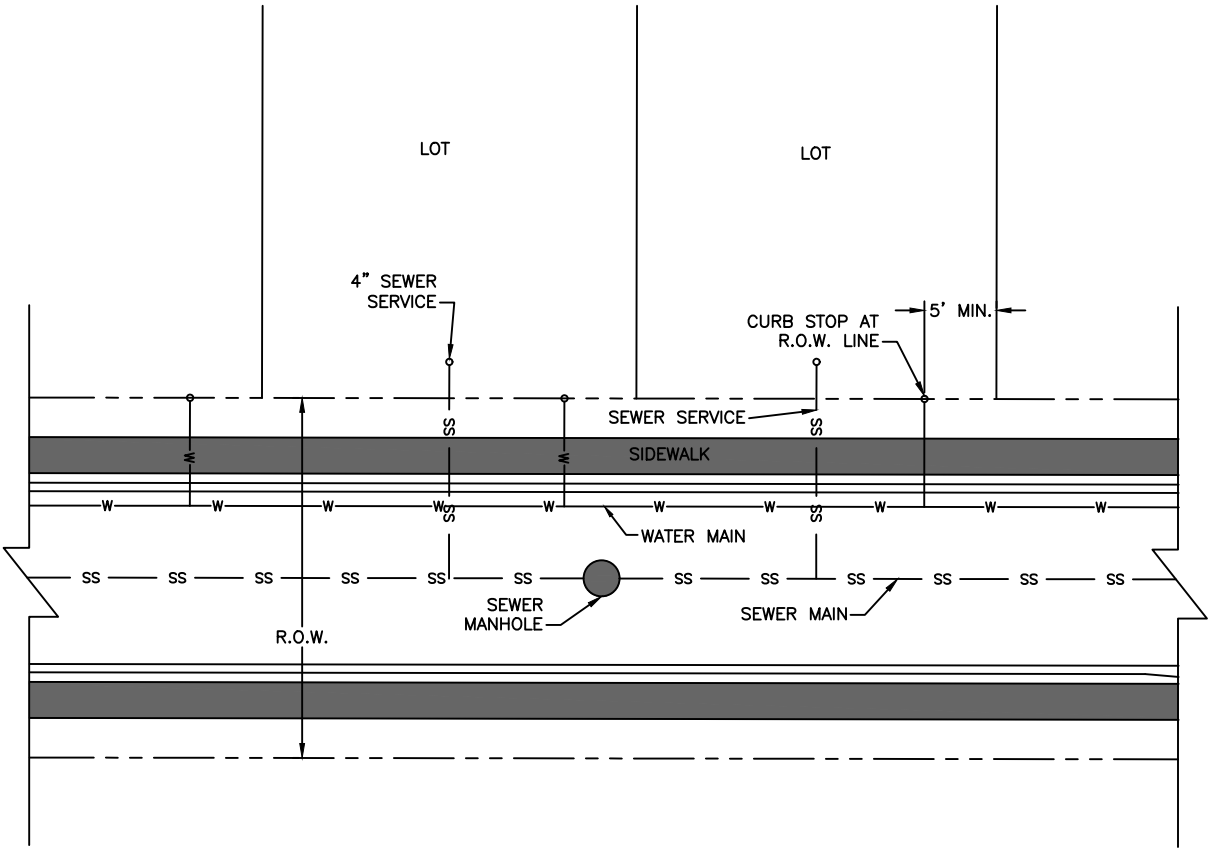

NOTES:

1. SEWER SERVICE TO BE PLACED APPROXIMATELY IN THE MIDDLE OF THE LOT AND EXTENDED 10 FEET PAST R.O.W.

2. SERVICES SHALL BE MARKED WITH 2"x4" POST AT TERMINATION POINT FOR LOCATION DURING CONNECTION TO RESIDENCE. POSTS SHALL BE SPRAY PAINTED BLUE FOR WATER AND GREEN FOR SEWER.

UTILITY SERVICE LOCATIONS

Drawn: TMM	Revised:		PAONIA COLORADO	WW–19
Date: JANUARY 2026	Revised:			
Scale: N.T.S.	Revised:			

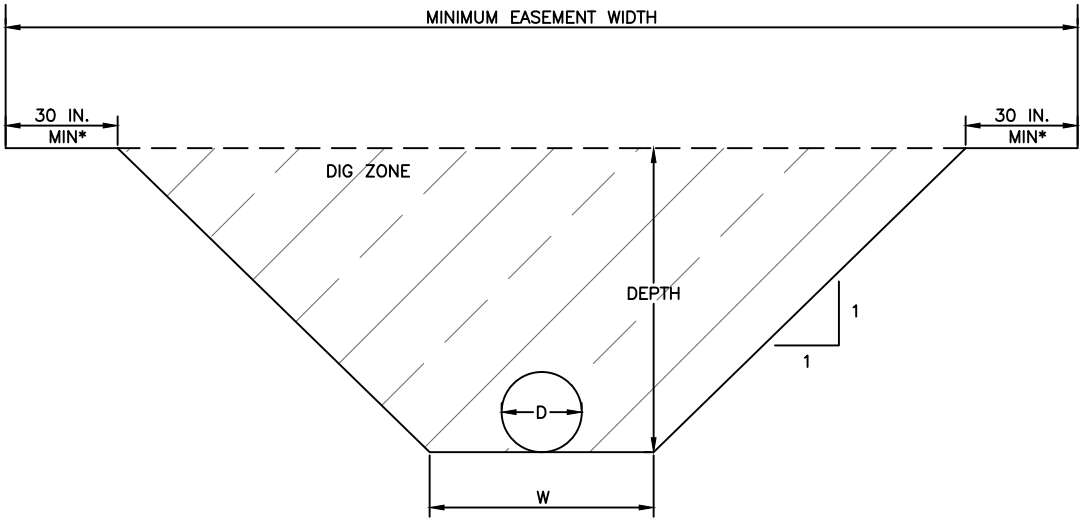

PIPE DIAMETER D	MINIMUM W
≤ 12 IN.	3 FT.
≤ 18 IN.	4 FT.
≤ 24 IN.	5 FT.
≤ 30 IN.	6 FT.

NOTES:

1. MINIMUM EASEMENT = 20 FT.
2. TYPICAL WATER ≤12 IN. WITH 5 FT COVER = 20 FT.
3. NO OTHER UTILITY IN DIG ZONE.
4. POTABLE WATER TO SEWER 10 FT MINIMUM HORIZONTAL.
5. MINIMUM CLEAR DISTANCE BETWEEN WH LINE = 30".
6. MINIMUM CLEAR DISTANCE BETWEEN WH LINE AND OTHER = 5 FT.
7. *SIDE SETBACK OF 30" MAY BE APPLIED EACH SIDE OR 5' ON SINGLE SIDE AS LONG AS DIG ZONE IS WITHIN EASEMENT.

EASEMENT & SEPARATION STANDARDS – WATER/SEWER MAINS

Drawn: TMM	Revised:	PAONIA COLORADO	WW–20
Date: JANUARY 2026	Revised:		
Scale: N.T.S.	Revised:		

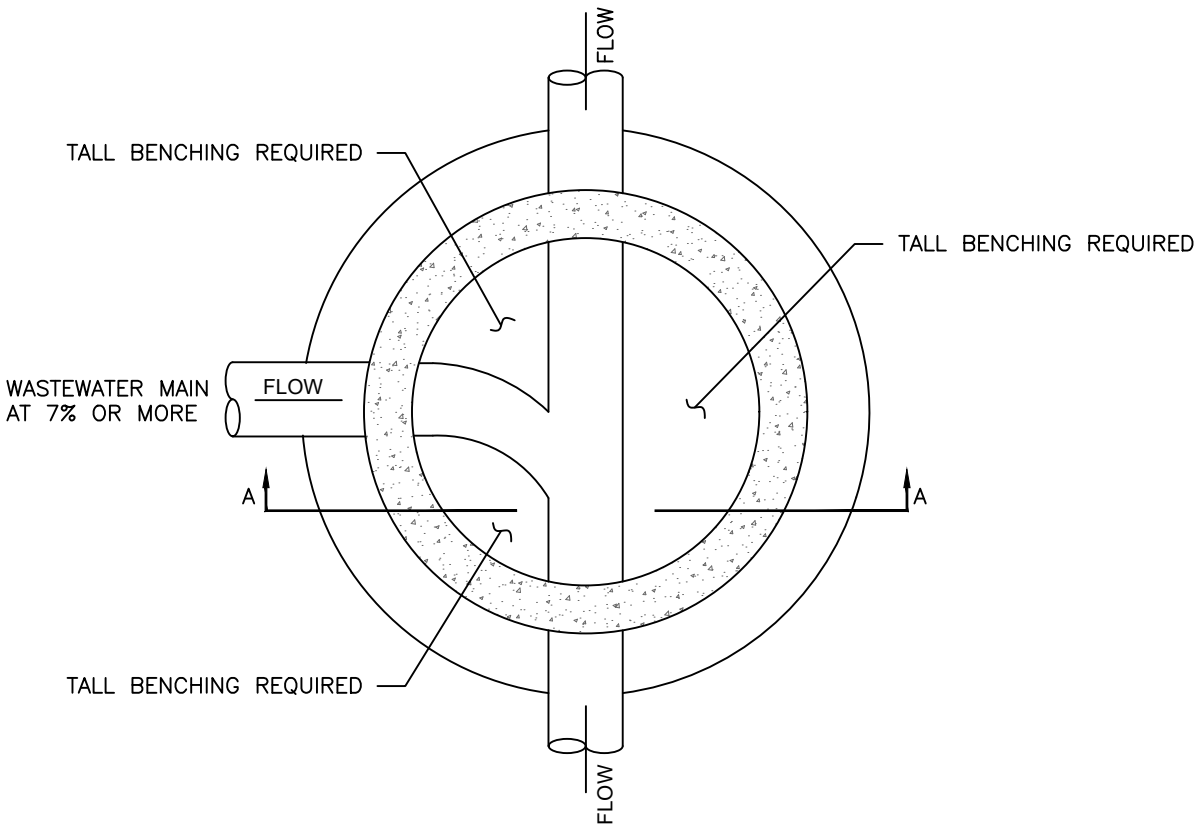

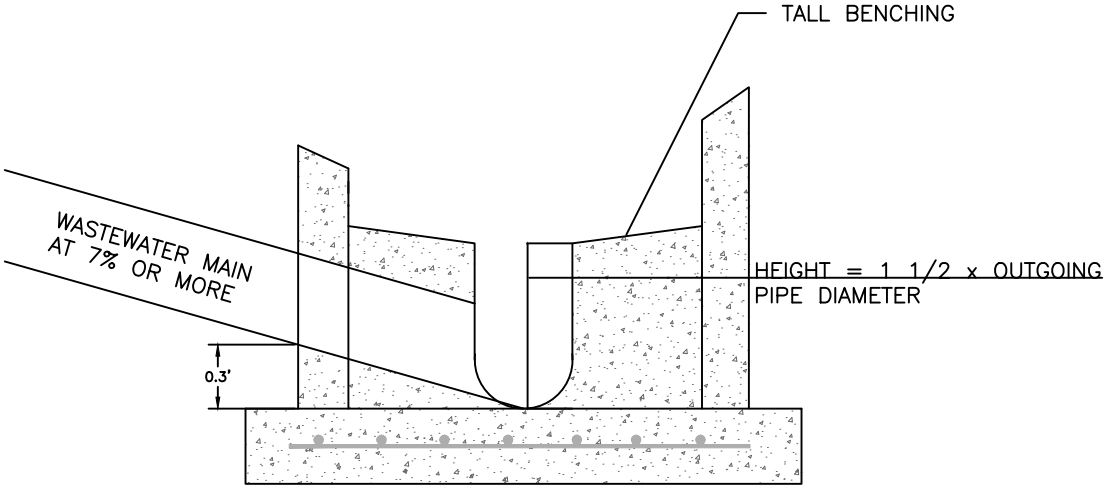

SECTION
A–A

NOTES:

1. SEE DETAIL DRAWING WW–2 FOR MANHOLE REQUIREMENTS.
2. STRAIGHT THROUGH MANHOLES THAT HAVE A PIPE COMING IN AT 7% OR MORE REQUIRE TALL BENCHING ON BOTH SIDES.

HIGH VELOCITY PROTECTION FOR INCOMING SLOPES 7% OR GREATER

Drawn: TMM	Revised:	PAONIA COLORADO	WW–21
Date: JANUARY 2026	Revised:		
Scale: N.T.S.	Revised:		

DETAIL A

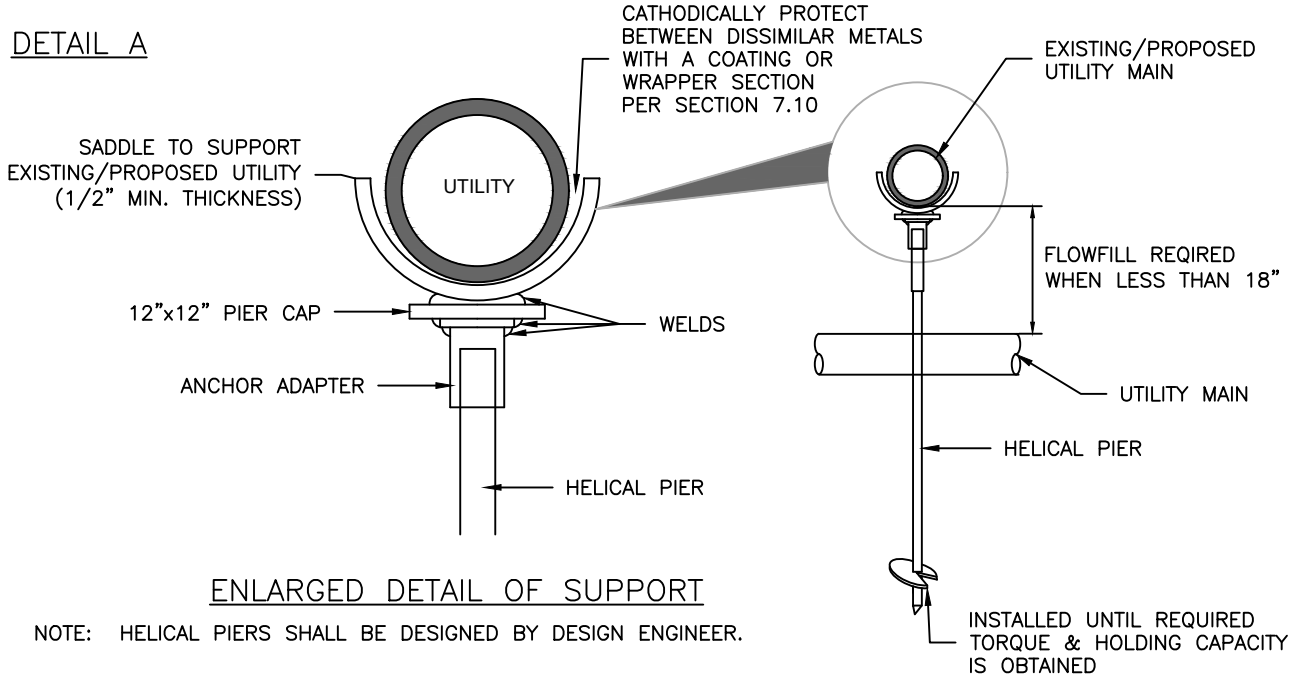

ENLARGED DETAIL OF SUPPORT

NOTE: HELICAL PIERS SHALL BE DESIGNED BY DESIGN ENGINEER.

DETAIL B

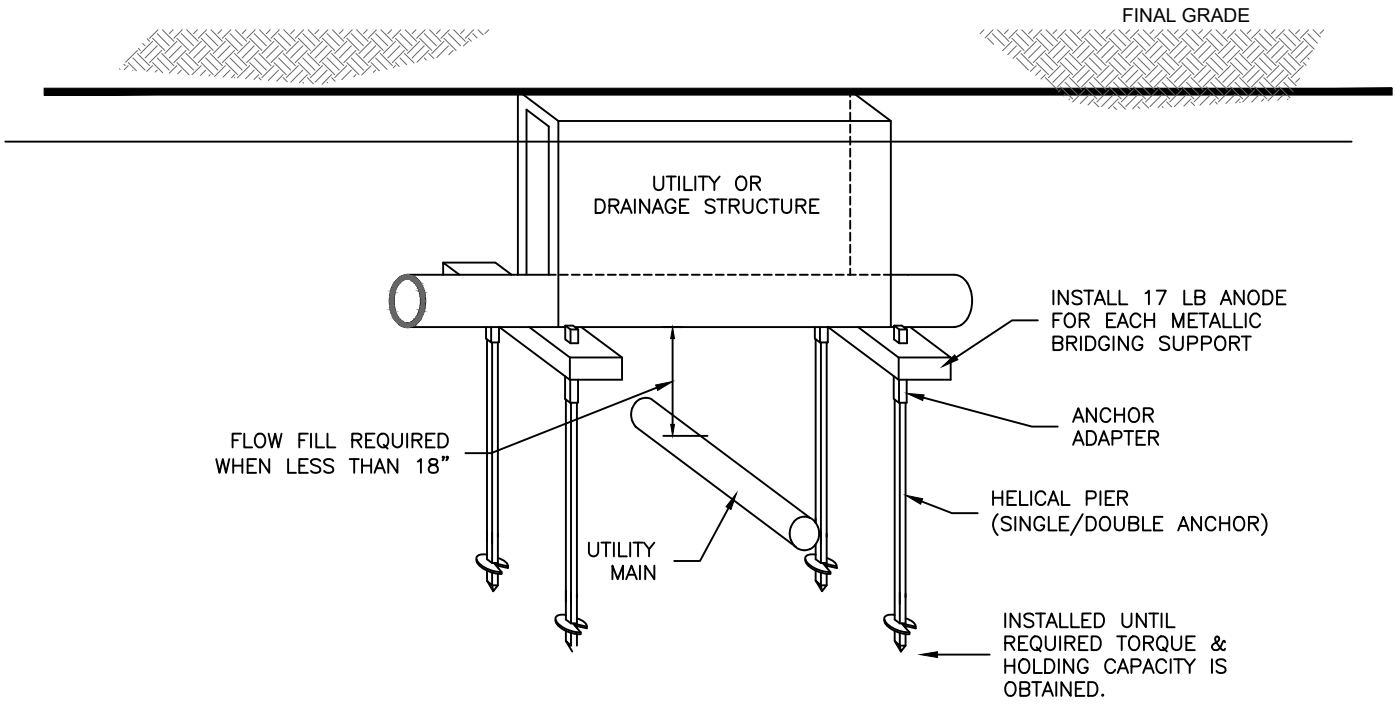

NOTES:

1. ALL METALLIC STRUCTURE AND PIPE SHALL BE CATHODICALLY PROTECTED PER SECTION 7.10.

STEEL CARRIER PIPE WITH HEILICAL PIERS

Drawn: TMM	Revised:	PAONIA COLORADO	WW–22
Date: JANUARY 2026	Revised:		
Scale: N.T.S.	Revised:		

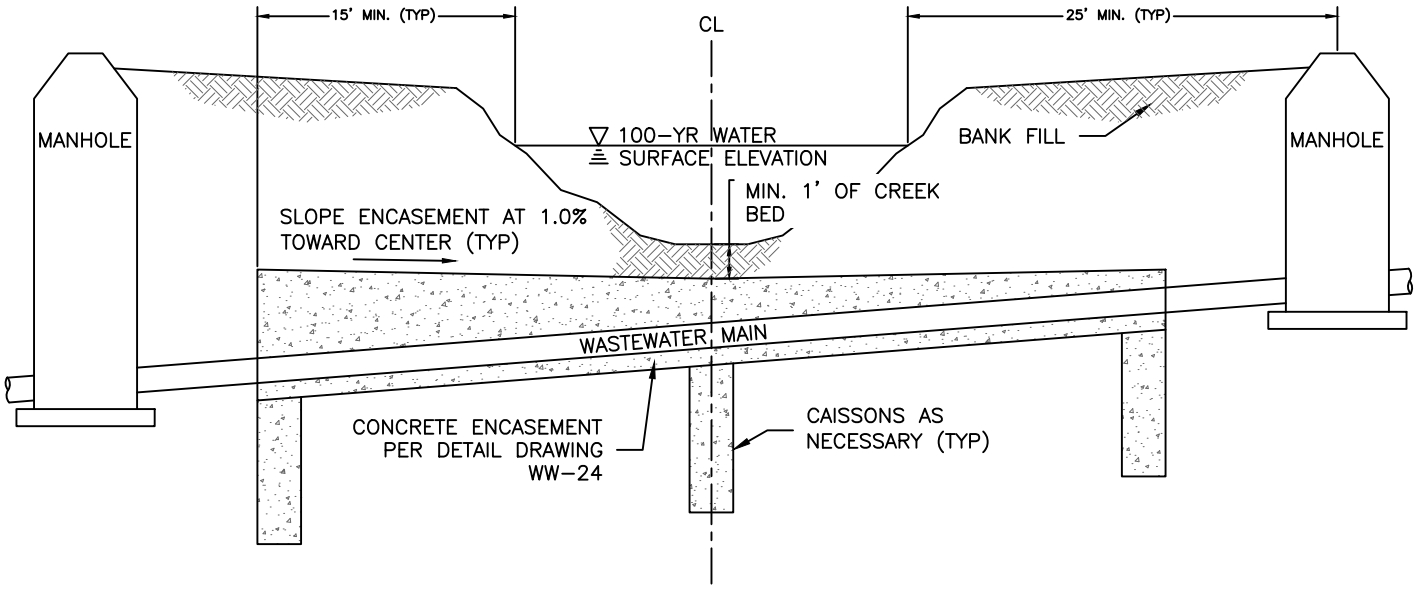

TYPICAL STREAM CROSSING CROSS SECTION

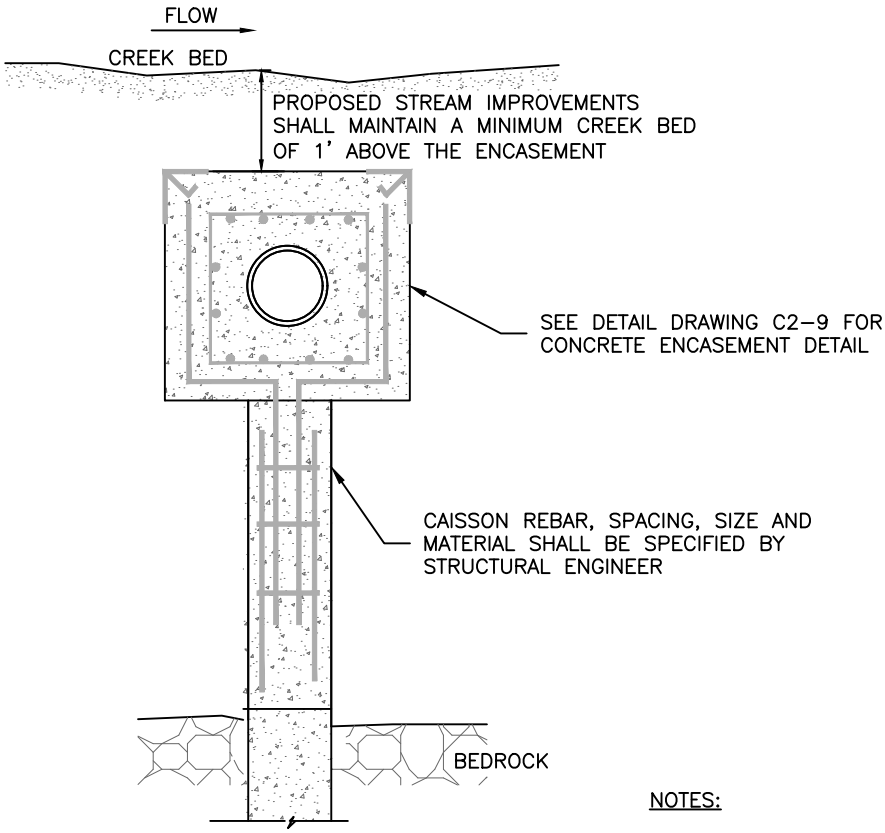

CONCRETE ENCASEMENT DETAIL
WITH CAISSON

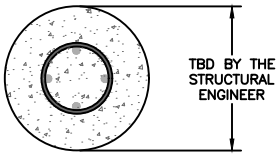

CAISSON
CROSS SECTION

NOTES:

1. ALL STREAM CROSSINGS SHALL BE REVIEWED AND APPROVED BY THE TOWN ENGINEER.

TYPICAL CREEK CROSSING

Drawn: TMM	Revised:	PAONIA COLORADO	WW-23
Date: JANUARY 2026	Revised:		
Scale: N.T.S.	Revised:		

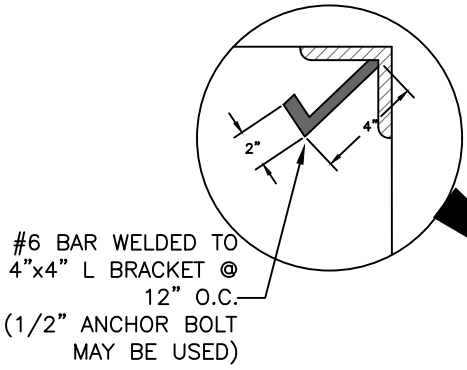

L BRACKET DETAIL

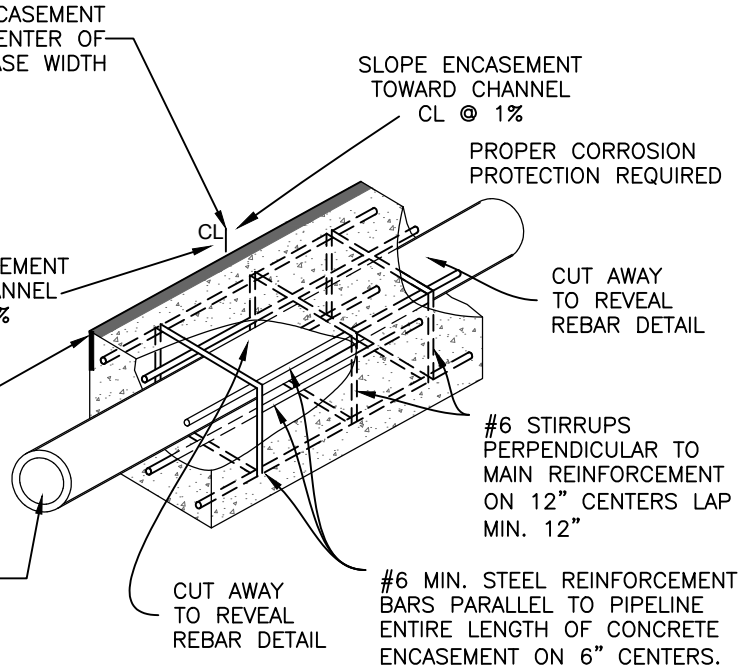

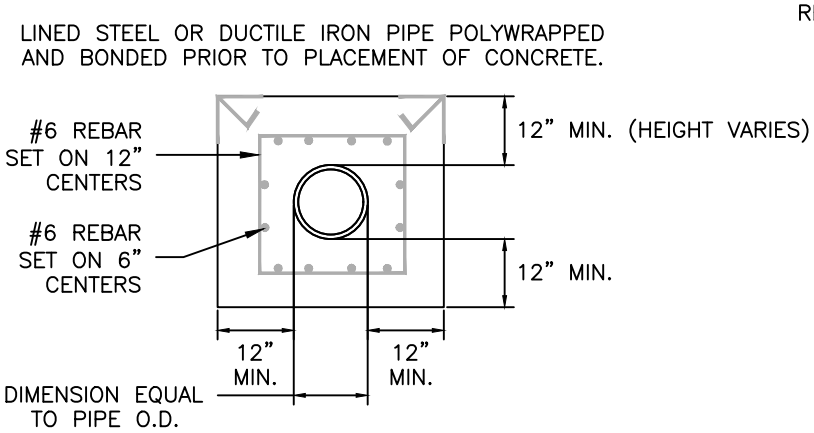

CONCRETE ENCASEMENT DETAIL WITHOUT CAISSON

PIPE ENCASEMENT DETAIL

Drawn: TMM	Revised:	PAONIA COLORADO	WW–24
Date: JANUARY 2026	Revised:		
Scale: N.T.S.	Revised:		

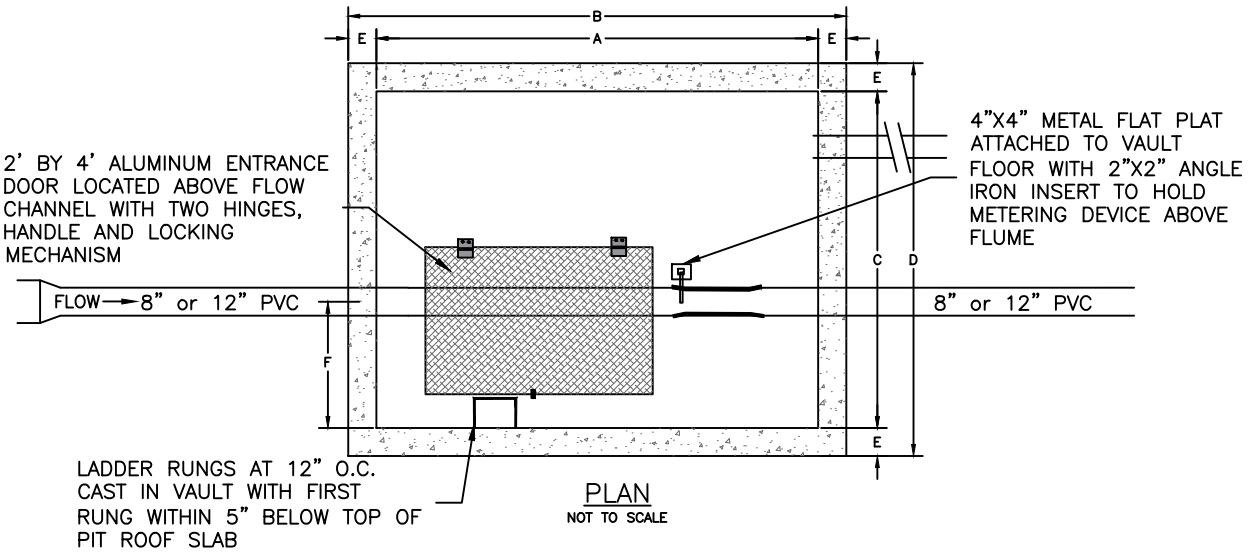

	A	B	C	D	E	F	G	H	J	K
Size	12'–6"	13'–10"	8'–0"	9'–4"	0'–8"	3'–0"	0'–10"	3'–2"	3'–6"	VARIES

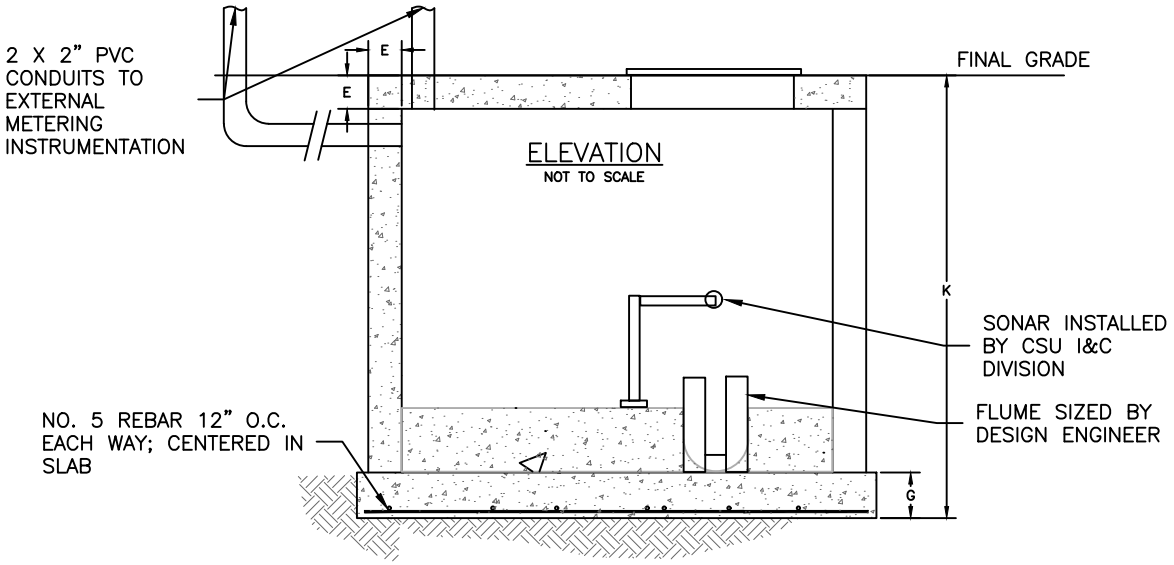

NOTES:

1. ALL CONCRETE WORK SHALL COMPLY WITH TOWN OF PAONIA STANDARD SPECIFICATIONS AND THE LATEST ACI–318 CODE.
2. ALL CONCRETE VAULTS SHALL BE DESIGNED FOR HS–20 TRAFFIC LOADING CONDITIONS AND 300 PSF SURCHARGE LOAD.
3. SHOP DETAIL DRAWINGS FOR ALL VAULTS ARE REQUIRED AND WILL BE APPROVED BY THE TOWN OF ENGINEER

WASTEWATER METER VAULT

Drawn: TMM	Revised:	PAONIA COLORADO	WW–25
Date: JANUARY 2026	Revised:		
Scale: N.T.S.	Revised:		

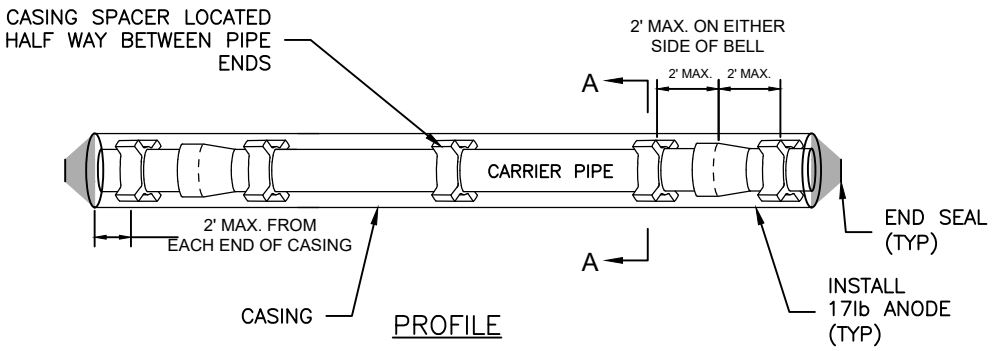

PROFILE

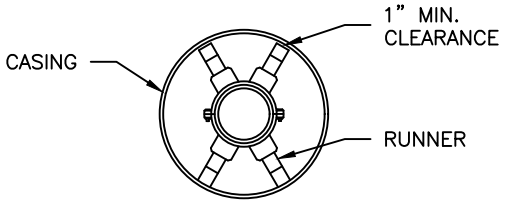

SECTION A–A

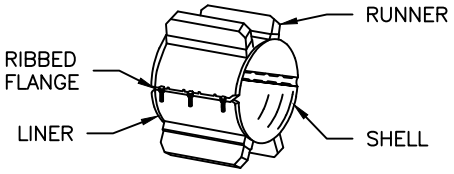

SPACER DETAIL

CARRIER PIPE:

1. CARRIER PIPE SHALL BE CENTERED WITHIN CASING BY USE OF APPROVED CASING SPACERS. (SEE CHAPTER 4)

PLACEMENT OF SPACERS ON CARRIER PIPE:

1. CASING SPACERS SHALL BE PLACED MAX. 2' FROM EACH END OF CASING AND ON EITHER SIDE OF EACH BELL. WHEN CARRIER PIPE IS PVC, CASING SPACER SHALL BE PLACED AT THE HOME MARK TO PREVENT OVER–BELLING. SPACERS SHALL ALSO BE PLACED HALF WAY BETWEEN PIPE ENDS, OR IN ACCORDANCE WITH PIPE MANUFACTURERS RECOMMENDATIONS.

END SEALS:

1. END SEALS SHALL BE USED TO ENSURE A WATER TIGHT SEAL ON EITHER END OF THE CASING.

CATHODIC PROTECTION:

1. CASING SHALL BE CATHODICALLY PROTECTED USING A 17 LB HIGH POTENTIAL ANODE AND AN APPROVED COATING. SEE SECTION 7.10.

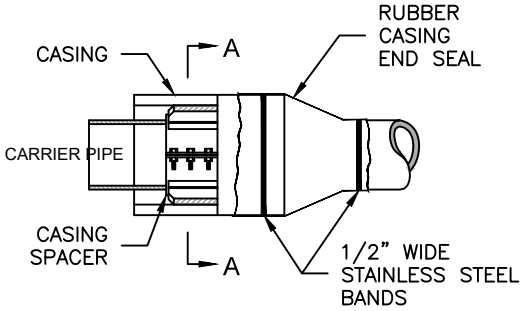

END SEAL DETAIL

TYPICAL STEEL CASING INSTALLATION

Drawn: TMM	Revised:	PAONIA COLORADO	WW–26
Date: JANUARY 2026	Revised:		
Scale: N.T.S.	Revised:		

TOWN OF PAONIA
BOARD OF TRUSTEES MEETING
STAFF REPORT

AGENDA ITEM:	Consideration of the Town acquiring a Police Officer candidate employment agreement.
SUBMITTED BY:	M. Laiminger – Chief of Police
DATE:	02/02/2025
BACKGROUND:	The Paonia Police Department currently has one (1) opening for a POST certified police officer, and the adopted 2026 budget accounts for this position. As the matter relates to personnel and the dollar value is within the Administrator/Treasurer approval authority limits, this process will be overseen by the Administrators office.
BUDGET:	The adopted 2026 budget fully accounts for this POST certified police officer.
RECOMMENDATION:	N/A
ATTACHMENT:	N/A

TOWN OF PAONIA
BOARD OF TRUSTEES MEETING
STAFF REPORT

AGENDA ITEM:	Consideration of change in IGA with Delta County Road and Bridge
Submitted By	N. Poulos
DATE:	2-10-26
BACKGROUND:	In prior years Paonia has had a renewed IGA with Delta County Road and Bridge to pave/overlay a given dollar amount of asphalt every year. As years went on the Town is running out of areas to overlay, as we do not have milling equipment to mill down roads first. This past year PW has been working hard at re-painting the curbs, parking spaces and traffic control. However, the equipment purchased for painting is not suited for long stretches of continuous painting. PW is asking County to assist with painting the center strip on 2nd street and out Samuel Wade. There have been many requests for 2nd st and Samel Wade to be painted. County has offered to use their equipment to help us out.
BUDGET:	IGA
RECOMMENDATION:	PW recommends accepting the IGA with Delta County to paint center stripes down Samuel Wade Rd and 2nd St

ATTACHMENT:	IGA

INTERGOVERNMENTAL AGREEMENT

I. PARTIES:

A. BOARD OF COUNTY COMMISSIONERS OF DELTA COUNTY/DELTA COUNTY ("Delta County")

B. Town Of Paonia

II. PURPOSE: Paint Stripe

III. AUTHORITY: C.R.S. 29-1-203 (see C.R.S.), C.R.S.29-1-202 Definitions: As used in this part 2, unless the context otherwise requires:

1. **"Government" means any political subdivision of the state, any agency or department of the state government or of the United States, a federally recognized tribal entity, and any political subdivision of an adjoining state.**
2. **"Political subdivision" means a county, city and county, city town, service authority , school district, local improvement district, law enforcement authority, city or county housing authority, or water, sanitation, fire protection, metropolitan, irrigation, drainage, or other special district, or any other kind of municipal, quasi-municipal, or public corporation organized pursuant to law.**

IV. EFFECTIVE DATE June 1, 2026 TERM: 180 Days

V. DELTA COUNTY:

A. Obligations: Delta County will furnish all Equipment and Labor to Accomplish Project(s)

B. Financial Responsibility: None

VI. Town Of Paonia

A. Obligations: Town of Paonia will furnish traffic control and paint.

B. Financial Responsibility: 100% Of cost to Accomplish Project(s)

VII. ADDITIONAL PROVISIONS:

VIII. RIGHT TO TERMINATE (if any): Thirty (30) days written notice

DELTA COUNTY

By_____

Title_____**Date**_____

TOWN OF Paonia_____

By_____

Title_____**Date**_____

TOWN OF PAONIA
BOARD OF TRUSTEES MEETING
STAFF REPORT

AGENDA ITEM:	Actions & Presentations: Ratification of the Decision to extend Construction Inspection Services with the City of Delta for Another Year
SUBMITTED BY:	Daoine Bachran, Utility Billing & Permit Coordinator
DATE:	2-10-26
BACKGROUND:	The town has historically subcontracted out building inspections, and the Town's current contract with the City of Delta for building inspections ends February 1st, 2026. If we wish to continue using these services, the Town needs to create a new contract with the City of Delta. Delta provides us with an average of ten hours of building services per week over the course of two days, as well as a vehicle for the inspector. We have had good results with the arrangement, and the current inspector is excellent.
BUDGET:	The services cost and are budgeted at $2,300 per month, or $27,600 per year. 10-43-20 (Building Department - Legal, Engineering & Professional Services)
RECOMMENDATION:	The Town Administrator recommends creating a new contract with the City of Delta.
ATTACHMENT:	FY 2024-2025 Intergovernmental Agreement for Inspection Services

INTERGOVERNMENTAL AGREEMENT
BETWEEN THE CITY OF DELTA, CO AND THE TOWN OF PAONIA, CO
FOR INSPECTION SERVICES

THIS INTERGOVERNMENTAL AGREEMENT ("IGA") is entered into this 6th day of February, 2024 by and between the CITY OF DELTA, COLORADO, a Colorado home rule municipality ("City") and the TOWN OF PAONIA, COLORADO, a Colorado statutory town ("Town").

RECITALS

WHEREAS, the Town of Paonia is in need of building services, including specifically building inspection services;

WHEREAS, the City of Delta has a Community Development department with the experience necessary to provide needed building services;

WHEREAS, the City and Town have the power to enter into this IGA pursuant to C.R.S. 29-1-203; and

WHEREAS, the City and Town believe shared building services will benefit both entities by increasing capacity and coordination.

NOW THEREFORE, and in consideration of the mutual covenants and conditions set forth herein, the parties agree as follows:

1. The City shall:
    a. Provide building services to the Town including:
        i. Residential plan review pursuant to Paonia's ordinances and adopted codes
        ii. Building inspections for compliance with approved plans
        iii. Support the administration of permits
        iv. Coordinate building services with Town's zoning and subdivision processes consistent with Paonia ordinances and adopted codes
        v. Such services shall not include: (i) review of plans for zoning or subdivision compliance; (ii) electrical and plumbing plan review and inspections; (iii) code enforcement; (iv) participation in, and preparation of staff reports and other materials for, meetings of the Paonia Board of Trustees, Planning Commission, and Zoning Board of Adjustment, Building Code Board of Appeals, or any other board or commission of the Town

b. Provide City staff and/or consultant(s) to complete the building services described above in a timely manner consistent with Town ordinances and adopted codes.
c. The City will provide an average of ten (10) hours of building services to the Town per week, over the course of two (2) days.
d. Provide a vehicle for travel from the City to the Town.

2. The Town shall:
   a. With the City's support, administer all permits including supplying all application forms, receiving applications, collecting fees, tracking permits, keeping necessary files, others
   b. Notify the City when an application has been received by the Town

3. Term: The initial term of this IGA shall commence upon execution by all parties through February 2025 (one year). Upon the expiration of the initial term and any renewal term, this IGA shall automatically renew for an additional one-year period (a "renewal term"), subject to annual appropriation of funds for services rendered, and unless otherwise terminated in accordance with the provisions of this agreement.

4. Payment: As the City's exclusive compensation for services rendered under this IGA, the Town shall provide a payment of $2,300 per month to the City. Payments are to be made monthly. The monthly rate shall be reviewed by the parties once annually. Any change to the City's monthly rate shall require at least 60 days' written notice to the Town, during which period the Town may decide to terminate the IGA if the Town finds the rate increase excessive, unreasonable, or otherwise objectionable.

5. Communication: The City and Town shall each select a primary point of contact and all communications related to the performance of duties defined in this IGA shall be conducted solely between the points of contact. Additionally, the key City staff involved in providing the shared services described in this IGA shall report as needed to the Town's Administrator, or authorized designee.

6. Amendments: Amendments to this IGA may only occur upon agreement of both the City Manager and Town Administrator. Any amendments must be in writing and signed by both administrators.

7. Termination: Either the City or Town may terminate this IGA by providing the other party with at least 30 days' advanced written notice of termination. Such notice shall be provided to the City Manager or the Town Administrator, as applicable.

8. Quality of Work: City shall exercise in its performance of the building services hereunder in a manner consistent with that degree of care and skill ordinarily exercised by members of the same profession currently practicing under similar circumstances.

9. Independent Contractor: It is the expressed intent of the parties that City personnel performing services for the Town under this IGA are not employees, agents, officers, or servants of the Town, and that:
    a. CITY SHALL SATISFY ALL TAX AND OTHER GOVERNMENTALLY IMPOSED RESPONSIBILITIES INCLUDING, BUT NOT LIMITED TO, PAYMENT OF STATE, FEDERAL AND SOCIAL SECURITY TAXES, UNEMPLOYMENT TAXES, WORKERS' COMPENSATION AND SELF-EMPLOYMENT TAXES. NO STATE, FEDERAL OR LOCAL TAXES OF ANY KIND SHALL BE WITHHELD OR PAID BY THE TOWN.
    b. CITY'S EMPLOYEES AND OFFICERS ARE NOT ENTITLED TO WORKERS' COMPENSATION BENEFITS EXCEPT AS MAY BE PROVIDED BY THE CITY NOR TO UNEMPLOYMENT INSURANCE BENEFITS UNLESS UNEMPLOYMENT COMPENSATION COVERAGE IS PROVIDED BY THE CITY OR SOME ENTITY OTHER THAN THE TOWN.

10. Documents. All computer input and output, analyses, plans, documents photographic images, tests, maps, surveys, electronic files and written material of any kind generated in the performance of this IGA or developed for the Town in performance of the City's services are and shall remain the sole and exclusive property of the Town. All such materials shall be promptly provided to the Town upon request therefor and at the time of termination of this IGA, without further charge or expense to the Town and in hardcopy or an electronic format acceptable to the Town, or both, as the Town shall determine. City shall not provide copies of any such material to any other party without the prior written consent of the Town. City shall not use or disclose confidential information of the Town for purposes unrelated to performance of this Agreement without the Town's written consent.

11. Liability. Each party shall be responsible for its own acts, errors, and omissions, and for the acts, errors, or omissions of such party's employees, officers, and agents, under this IGA. The parties are advised to procure and maintain policies of insurance in types and amounts sufficient to cover such responsibilities. Nothing herein shall be deemed a waiver or limitation of the governmental immunity of the City or the Town.

This Intergovernmental Agreement (IGA) is dated February 6th, 2024, between the City of Delta ("Delta") and the Town of Paonia, CO ("Town").

City of Delta

Kevin Carlson, Mayor

Attest

Jolene E. Nelson, Clerk

Town of Paonia, Colorado

Mary Bachran, Mayor

Attest

Samira Vetter, Town Clerk

TOWN OF PAONIA
BOARD OF TRUSTEES MEETING
STAFF REPORT

AGENDA ITEM:	Consideration of Resolution 03-26 Temporarily Suspending the Tree Board While the Trustees Consider Hiring a Certified Arborist Consultant.
SUBMITTED BY:	Samira Vetter, Town Clerk
DATE:	February 10, 2026
BACKGROUND:	Staff is requesting to put out an RFQ for hiring a certified Arborist to act as a consultant, as needed, while we continue to put new processes, schedules and ongoing plans into place to catch up long neglected maintenance on the Town′s trees. We have a lot of work to do and having a consistent consultant available could be invaluable to finishing those projects. While that is happening, since the Paonia Municipal Code requires the Tree Board to meet once a month, and the Tree Board no longer has enough members to convene, we are asking that you temporarily suspend the Tree Board.
BUDGET:	TBD
RECOMMENDATION:	To adopt Resolution 03-26 Temporarily suspending the Tree Board while the Trustees consider hiring a Certified Arborist Consultant.
ATTACHMENT:	Resolution 03-26

TOWN OF PAONIA, COLORADO
RESOLUTION NO. 03-2026

A RESOLUTION OF THE BOARD OF TRUSTEES OF THE TOWN OF PAONIA, COLORADO TEMPORARILY SUSPENDING THE TREE BOARD WHILE THE TRUSTEES CONSIDER HIRING A CERTIFIED ARBORIST CONSULTANT

WHEREAS, the Town of Paonia ("Town") is a statutory Town in Delta County Colorado; and

WHEREAS, Colorado State Statute does not require the creation of a Tree Board; and

WHEREAS, Paonia Municipal Code 2-7-10 created a Tree Board which shall be advisory in character and will represent the Paonia community in advising the Town Administrator, Town Board of Trustees, and Town staff on trees as defined under Article 7, Section 2-7-30; and

WHEREAS, Paonia Municipal Code 2-7-20 establishes that the Tree Board shall consist of a minimum of two (2) and a maximum of six (6) volunteer community members, who need not reside within the limits of the Town and one (1) member of the Board of Trustees; and

WHEREAS, Paonia Municipal Code 2-7-20 establishes that the Board of Trustees shall appoint all Tree Board members. The terms of office for the Tree Board shall be two (2) years, renewable by the Board of Trustees; and the member of the Board of Trustees consistent with his/her term of office; and

WHEREAS, the terms of three of the Tree Board members expired in January of 2026 and two additional members have resigned prior to their terms expiring leaving a single community member which does not fulfill the membership requirements required by Town Code; and

WHEREAS, the 2026 budget adopted by the Board of Trustees includes funding for public Right of Way tree maintenance; and

WHEREAS, the first Policy in the Urban Forest Element included in the Town's July 2025 Comprehensive Plan, specifies the monitoring, proper care and careful replacement of street and park trees to maintain, improve, and expand the Town's urban forest; and

WHEREAS, in order to fulfill the desire to proactively maintain a healthy and managed urban forest, this can be best achieved through the services of a contracted, certified Arborist to recommend best practices.

NOW THEREFORE, BE IT RESOLVED BY THE BOARD OF TRUSTEES OF THE TOWN OF PAONIA, COLORADO, COUNTY OF DELTA, STATE OF COLORADO THAT:

The Tree Board shall be temporarily suspended while the Town initiates and completes the process necessary for the hiring of a contracted, certified Arborist consultant.

INTRODUCED, READ, APPROVED AND ADOPTED by a vote of _____ for and _____ against at a regularly scheduled meeting of the Board of Trustees on February 10, 2026, at 6:30 P.M., at the Paonia Town Hall, 214 Grand Avenue, Paonia, Colorado.

TOWN OF PAONIA, COLORADO

_____
Paige Smith, Mayor

ATTEST:

_____
Samira M. Vetter, Town Clerk

TOWN OF PAONIA
BOARD OF TRUSTEES MEETING
STAFF REPORT

AGENDA ITEM:	Consideration of Approval of Change Order #1 for Additional Inspection Hours for KLM Engineering
SUBMITTED BY:	Samira Vetter, Town Clerk
DATE:	February 10, 2026
BACKGROUND:	Administrator Wynn will be available for questions and background
BUDGET:	Additional $32,935.00
RECOMMENDATION:	To approve Change Order #1 for $ 32,935.00 for additional inspection services for KLM Engineering
ATTACHMENT:	Change Order #1

Corporate Office

1976 Wooddale Drive, Suite 4
Woodbury, MN 55125
651-773-5111

CHANGE ORDER NO.1

January 30,2026

Sent Via Email Only

Stefen Wynn
City of Paonia
214 Grand Avenue
Paonia, CO 81428

Re: 2,000,000-Gallon GST Coating Inspection Services
Paonia, Colorado

Dear Mr. Wynn,

Original Agreement:

TOTAL HOURLY, NOT TO EXCEED	**$97,860.00**

Change Order No.1:

Additional 3 weeks of AMPP coating inspection billed as time-and-materials basis including mobilization. Daily Rate $1,568.00 per day.

TOTAL CHANGE ORDER No. 1	**$32,935.00**
PROJECT TOTAL HOURLY NOT TO EXCEED	**$130,795.00**

Copyright 2025 by KLM Engineering, Inc.

AGREEMENT

If the City of Paonia finds this Change Order acceptable, please sign and return it by email. By signing and returning this pages only, you agree to terms of the entire agreement documents submitted.

This Agreement, between The Landmark Resort and KLM Engineering, Inc. of Woodbury, Minnesota is accepted by:

CITY OF PAONIA **214 Grand Avenue** **Paonia, CO 81428**	**KLM ENGINEERING, INC.** **1976 Wooddale Drive, Suite 4** **Woodbury, MN 55125**
	Dewey Prinzing
Signature	Signature
	Dewey Prinzing
Name	Name
	Vice President of Business Development
Title	Title
	January 30, 2026
Date	Date

We look forward to working with you.

Sincerely,

KLM ENGINEERING, INC.
Dewey Prinzing
Vice President of Business Development
1976 Wooddale Drive, Suite 4
Woodbury, MN 55125
Cell: 651-434-4321
Email: dprinzing@klmengineering.com

Copyright 2025 by KLM Engineering, Inc.

TOWN OF PAONIA
BOARD OF TRUSTEES MEETING
STAFF REPORT

AGENDA ITEM:	Actions & Presentations: Consideration of the Ad Hoc Short Term Rental Committee's Request for Funds for a Facilitator for Their Meetings
SUBMITTED BY:	Stefen Wynn, Town Administrator
DATE:	2-10-26
BACKGROUND:	The Ad Hoc STR Committee requests funding to pay a facilitator for their meetings. Kathy Swartz, who has experience with facilitation, filled this position as a member of the committee previously. Due to the consensus model the committee adopted and the strong opinions of participants, a paid facilitator would significantly benefit the process. Administrator Wynn will be on hand to answer further questions.
BUDGET:	
RECOMMENDATION:	The Town Administrator recommends approving funds for the facilitator.
ATTACHMENT:	

TOWN OF PAONIA
BOARD OF TRUSTEES MEETING
STAFF REPORT

AGENDA ITEM:	Consideration of Approval of Agreement with Net2Phone Business Communications for the Town's Phone Systems
SUBMITTED BY:	Samira Vetter, Town Clerk & Ruben Santiago, Deputy Clerk
DATE:	February 6, 2026
BACKGROUND:	With the transition from Phonz+ to Istonish as our IT Services Provider, our phone system was a loose end. Currently Phonz+ provides the phone service we have instead of just managing the account. Deputy Clerk Santiago and I attended a demo with Net2phone, where we got to see a full walkthrough of the services provided. While it is more expensive than our current provider it provides many more features that are considered standard in most industries, including the capability of being able to have customized recordings for office hours & holiday closures and being able to shuffle things around as needed. See attached for feature list This doesn't fall under the competitive purchasing process and Sole Source Justification Policy since it is less than $10,001. However, we are requesting your approval since it is a multi-year agreement.
BUDGET:	$427.58/month + a one-time charge of 262.72.
RECOMMENDATION:	To approve the multi-year agreement with Net2Phone Business Communications for the Town's Phone Systems
ATTACHMENT:	Net2Phone Quote Net2Phone Agreement

NET2PHONE

Business Communications

Count on net2phone to simplify and streamline your business communication.

At net2phone, we make **business communication straightforward** and **efficient**, ensuring you can connect to your customers and teams effortlessly, whether you're in the office or on the move.

We develop **AI-powered business communication solutions** to help businesses serious about customer experience **meet rising customer expectations** across voice, messaging, video, and chat by transforming conversations into experiences that fuel retention and growth.

From day one, we're here to support you. Our product experts, onboarding specialists, and customer success teams provide **personalized onboarding, free training, and ongoing technical support** to ensure you get the most from our services.

A Global Leader In Business Communication:

Who We Are

We deliver AI-powered enterprise communication platforms backed by expert guidance every step of the way.

Leveraging over 30 years of innovation, we go beyond support to maximize your platform's impact, helping you build workflows, integrate systems, and optimize your setup, so that everyday conversations drive your business forward.

What We Do

- **Customer-Centric Solutions:** Specialized platforms designed to enhance the customer journey.
- **Unified Communications:** Integrated Voice, Video, SMS, and Social Media channels.
- **Anywhere Access:** Robust applications for Web, Desktop, and Mobile devices.
- **Global Connectivity:** Enterprise-grade reach at national and international scale.
- **Ease of Use:** A streamlined interface designed for seamless adoption and efficiency.

At net2phone, we're more than a provider, we're your partner in success.

Core Services:

- Unified Communications
- AI Performance Coaching
- Contact Center
- SIP Trunking
- AI Agent

net2phone

UNIFIED COMMUNICATIONS

Feature List

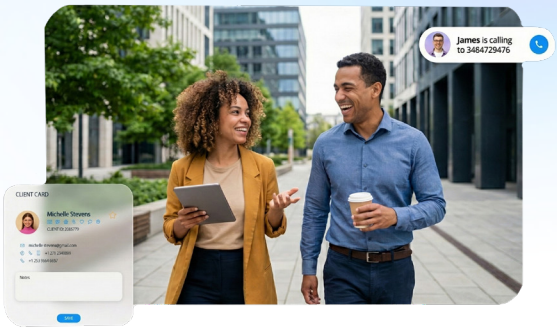

Additional features available. Availability varies by plan. Contact a representative to customize your solution.

Business System Features

Core channels and platforms of Unite.

- Desktop Application
- Admin Portal
- Desktop Phone
- Internal Messaging
- Video Conferencing
- Web Interface / Softphone
- Business Text Messaging (SMS/MMS)
- Mobile App(Android/iOS)

Calling Features

Voice features built-in for routing and calling.

- Unlimited Calling Domestic
- Unlimited Calling International
- Web Calling (WebRTC)
- Auto Attendant / Welcome Greeting
- Call Routing
- Ring Groups
- Music on Hold
- Call Recording
- Call Transfer
- Conferencing
- Call Parking
- Call Forwarding
- Call Blocking
- Company Directory
- Interoffice Paging
- Time-based Rules and Scheduling
- Voicemail to Email

Mobility Features

On-the go business features.

- Mobile App
- Mobile Twinning
- Extension Mirroring
- Find Me/Follow Me
- Simultaneous Ring

Huddle Video Conferencing Features

Video features built-in for virtual face to face conversations.

- Video Recording
- Chat Messaging
- Screen Sharing
- Closed Captioning
- Virtual & Blurred Backgrounds
- YouTube Live Streaming
- AI Summary & Transcription
- Live Emoji Reactions
- Breakout Rooms

Artificial Intelligence

Built-in AI features for improving business efficiency

- Voice & Video Call Transcriptions
- Voice & Video Call Summaries
- Voice Call Sentiment Analysis
- Automated Action Items
- Automatic Email Follow-Ups for Voice Calls

Integrations

Connecting the tools you use most

- Microsoft Teams
- Salesforce
- Zoho
- Slack
- Zapier
- Google Chrome Extension
- Google Calendar and Contacts
- Custom API Integrations

Management

Features to help you manage your system.

- Analytics
- Call Logs
- Reporting
- Billing Portal

Security & Compliance

Built-in features to keep you in compliance and secure

- HIPAA
- Kari's Law
- Stir/Shaken
- Encrypted vFax
- Ray Baum
- e911
- Authorized Users
- Single Sign On (SSO)
- 2-Factor Authentication (2FA)
- Video Meeting Encryption

Phone Number Options

Phone number features and availability

- Number Porting
- Direct Number
- Toll Free Number
- Virtual Number
- International Numbers
- Fax Number

Add Ons

Features or capabilities that are available as an add-on to any plan they are not included with.

- AI Agent
- AI Coaching
- IP Desk Phone
- Receptionist Console
- Microsoft Teams Integration
- Select CRM Integrations
- Fax Line
- Virtual Fax Line
- Call Center Essentials (Queues, Wallboards, Barge/Whisper/Monitor, etc)

UNIFIED COMMUNICATIONS

Truly Global

With 900+ carrier interconnects, data centers in 9 countries, and 1800+ employees across 6 continents, net2phone delivers a truly global service. Enjoy free calling to 40+ countries, virtual numbers in 300+ cities, and full support for international number porting.

Unlimited Calling - Essentials Plan

United States* | Canada* | Mexico* | Puerto Rico

Unlimited Calling - Professional & Enterprise Plans

Argentina	Denmark	Ireland	Panama	Spain
Austria	Dom. Rep.	Israel	Peru	Sweden
Belgium	France	Italy	Poland	Switzerland
Brazil	Germany	Japan	Portugal	Taiwan
Canada*	Greece	Mexico*	Puerto Rico*	United States*
Chile	Hungary	Netherlands	Romania	US Virgin Islands
Colombia	Iceland	New Zealand	Slovakia	Venezuela
Cyprus	India*	Norway	South Korea	

* USA, Canada, Mexico, Puerto Rico, and India include both fixed and mobile. All other countries are fixed only.

International Phone Numbers (DID) Available for Add On

Argentina	Czech. Rep	India	Norway	South Korea
Australia	Denmark	Ireland	Panama	Spain
Austria	Dom. Rep.	Israel	Peru	Sweden
Belgium	Ecuador	Italy	Philippines	Switzerland
Bolivia	El Salvador	Japan	Poland	Taiwan*
Brazil	Finland	Luxembourg	Puerto Rico	Thailand
Bulgaria	France	Malaysia	Romania	Ukraine
Canada	Germany	Mexico	Serbia	UK
China	Guatemala	Netherlands	Singapore	Uruguay
Chile	Hong Kong	New Zealand	Slovakia	Venezuela
Colombia	Hungary	Nicaragua	South Africa	Vietnam

*Toll Free only

List subject to change at any time. Please call the net2phone support team at 866.978.8260 to confirm current availability and pricing.

Service Quote

net2phone
net2phone.com 866-978-8260

Quote **#456511474113**
Prepared on: **Jan 14, 2026**
Expires on: **Feb 13, 2026**

Prepared For:
Town of Paonia
214 Grand Ave
Paonia, CO 81428

Shipping To:
Town of Paonia
214 Grand Ave
Paonia, CO 81428

One Time Charges

Estimated Shipping and Handling Charges	$262.72
*Total One Time Charges	**$262.72**

Recurring Charges

No	SKU	Description	QTY	Unit Price	Extended Price
1	MR-N1-PLAN	net2phone Unite™ Essentials	17	$19.99	$339.83
2	SIP-T44W-AC-R	Yealink SIP-T44W 12-Line WiFi IP Phone with Power Supply Rental	14	$4.50	$63.00
3	CP935W-BASE-R	Yealink CP935W Wireless Touch-Sensitive Conference Phone with Base Rental	1	$24.75	$24.75
				*Total Monthly Recurring Charges	**$427.58**

*Totals shown do not include all applicable fees or taxes.
*All initial orders for less than five Hosted PBX seats or SIP Trunks are not authorized for discounting. If You initially order less than five Hosted PBX seats or SIP Trunks and subsequently add seats or SIP Trunks so that the total number of seats/SIP Trunks is greater than five, the rates set forth in initial order will not be eligible for re-pricing.
*The list of per minute usage charges (billed in one minute increments) and SMS charges (billed per message) can be found at https://rates.net2phone.com/2/essentials
This quote is subject to the terms and conditions found at https://www.net2phone.com/terms-of-service

This quote is also subject to a 36 month commitment.

To accept this quote please click the button below, or enter the complete url below in your browser:
https://partner.net2phone.com/api/presign/8303-4bc2?langCode=en

I ACCEPT THIS QUOTE

Equipment Rental Agreement – 36 Month Service Commitment

The terms and conditions of this Equipment Rental Agreement-36 Month Service Commitment ("Equipment Rental Agreement") are in addition to the Terms of Service that You agreed to at **https://www.net2phone.com/terms-of-service**, which Terms of Service are incorporated herein by reference.

You agree to rent the equipment listed on Exhibit A attached hereto ("Equipment") as part of a Service Bundle offering. The Service Bundle includes both Equipment and services, plus applicable taxes and fees.

Except as otherwise expressly set forth herein, You shall be liable to pay 100% of the Equipment's then-current list price (as determined by Net2Phone) plus applicable taxes, if the Equipment is lost, stolen or damaged. You will immediately notify Net2Phone in writing if the Equipment is lost, stolen or damaged.

Net2Phone is and will remain the owner of all Equipment unless title is conveyed to you in writing following Net2Phone's receipt of Your payment in full for the Equipment (if applicable, as set forth herein). Accordingly: (i) You shall not remove the Equipment from Your Service Address without the prior written approval of Net2Phone; (ii) You shall inform Net2Phone, upon demand, of the exact location of the Equipment while it is in Your possession; (iii) You shall keep the Equipment in a good state of condition; (iv) You shall not lease, rent or sell the Equipment to any third party; and (v) You shall not pledge or encumber the Equipment in any way.

EACH PIECE OF EQUIPMENT IS PROVIDED "AS IS" AND NET2PHONE MAKES NO WARRANTIES AND DISCLAIMS ALL WARRANTIES, WHETHER EXPRESS OR IMPLIED, INCLUDING, BUT NOT LIMITED TO, ANY IMPLIED WARRANTIES OF MERCHANTABILITY, FITNESS FOR A PARTICULAR PURPOSE, OR NONINFRINGEMENT WHETHER SAID WARRANTY ARISES UNDER PROVISIONS OF ANY LAW OF THE UNITED STATES OR ANY STATE THEREOF. SOME JURISDICTIONS DO NOT PERMIT THE DISCLAIMER OF CERTAIN IMPLIED WARRANTIES, SO CERTAIN OF THE FOREGOING DISCLAIMERS MAY NOT APPLY TO YOU. TO THE EXTENT THAT NET2PHONE CANNOT DISCLAIM ANY SUCH WARRANTY AS A MATTER OF APPLICABLE LAW, THE SCOPE AND DURATION OF SUCH WARRANTY WILL BE THE MINIMUM PERMITTED UNDER SUCH LAW.

Net2Phone will replace Equipment with identical or similar Equipment if the Equipment fails to operate due to manufacturer defect or in accordance with the manufacturer's specifications and operation instructions -- so long as the manufacturer's warranty is still in effect. Such replacement shall be made as soon as practicable after You return the non-conforming Equipment in accordance with the RMA instructions set forth in the Terms of Service. All Equipment returns that do not conform to the restrictions/procedures set forth in this agreement, the Terms of Service and/or the RMA process may also be subject to certain fees as set forth in the Terms of Service. You also agree that Equipment returns may be subject to a re-stocking fee as set forth in the Terms of Service.

As part of the Service Bundle offering, You agree to purchase the services set forth in the quote associated with this agreement (the "Service") for a minimum period of 36 months from the Service Date ("Minimum Period"); provided that if the Service Date is delayed, then the Minimum Period will be extended to match the number of days of such delay.

At the conclusion of the Minimum Period, if not earlier terminated in accordance with the terms of this agreement or the Terms of Service: (i) the Service term will expire if You have elected not to renew the Service term via notice to Net2Phone at least thirty (30) days prior to the end of the Minimum Period; (ii) the Service term will automatically renew for successive thirty day renewal terms if You have so elected via notice to Net2Phone at least thirty (30) days prior to the end of the Minimum Period; or (iii) the Service term will automatically renew for successive 36 month terms if neither of the foregoing applies (each such successive 36 month period referred to as a "Renewal Commitment Period") until You provide notice to Net2Phone at least thirty (30) days prior to the end of the applicable Renewal Commitment Period that You do not wish to renew the Service for another Renewal Commitment Period. In those states and jurisdictions that do not allow automatic renewals of certain service agreements, the foregoing auto-renewal terms will not apply to You. In that event, after the Minimum Period, there is no Renewal Commitment Period and the Service term will continue until canceled by either party at any time upon prior written notice. IN ORDER TO BE VALID, ANY CANCELLATION/NON-RENEWAL OF SERVICES BY YOU OR ELECTION OF A MONTH-TO-MONTH TERM (PURSUANT TO THIS PARAGRAPH), MUST BE MADE IN WRITING AND SENT TO CANCEL@NET2PHONE.COM.

If Net2Phone terminates this Equipment Rental Agreement prior to the end of the Minimum Period as a result of Your failure to make payment when due or upon your violation of this Equipment Rental Agreement or the Terms of Service; or if You decide to cancel[1] the Service prior to the end of the Minimum Period, then You shall be responsible to pay an early termination fee $100 per plan or channel (as applicable). You agree to return the Equipment within five (5) days following the expiration, termination or cancellation of this Equipment Rental Agreement (subject to the RMA fees set forth in the Terms of Service) or to purchase the Equipment within five (5) days following such expiration, termination or cancellation at a purchase price equal to 100% of the Equipment's then-current list price (as determined by Net2Phone) plus applicable taxes.

If you do not return Equipment within thirty (30) days following expiration, termination or cancellation, as set forth above, then you will be deemed to have purchased such Equipment at a purchase price equal to 100% of the Equipment's then-current list price (as determined by Net2Phone) plus applicable taxes. Furthermore, if You are obligated to return or purchase Equipment as set forth above and You fail to do so, then Net2Phone may, in addition to those remedies available to it at law, in equity, or as otherwise set forth in this Equipment Rental Agreement, take possession of any or all Equipment without notice, demand or legal process, and You hereby waive any and all damages occasioned by that taking of possession by Net2Phone or its designees.

---

[1]*For purposes of this agreement, the Service is deemed "canceled" if You cancel 20% or more of the aggregate number of plans or channels (as applicable) registered to You.

You shall pay all reasonable attorneys' fees and other fees, expenses and costs incurred by Net2Phone in protecting its rights under this Equipment Rental Agreement and for any action taken by Net2Phone to collect any amounts due to Net2Phone under this Equipment Rental Agreement.

This Equipment Rental Agreement is binding on You upon Your signature below. No counter-signature by Net2Phone is required. This Equipment Rental Agreement, as executed, may be delivered by facsimile transmission, by electronic mail, or by other electronic transmission, and may be transmitted in portable document format (.pdf) or other electronic or facsimile format. Each such executed facsimile, .pdf, or other electronic record shall be considered an original executed counterpart for purposes of this Equipment Rental Agreement. You (i) agree that You will be bound by Your own Electronic Signature (as such term is defined immediately below), (ii) accept the Electronic Signature by Net2Phone (if any) to this agreement, and (iii) agree that such Electronic Signatures shall be the legal equivalent of manual signatures. The term "Electronic Signature" means (a) the signing party's manual signature on a signature page, converted by the signing party to facsimile or digital form (such as a .pdf file) and received from the signing party's customary email address, customary facsimile number, or other mutually agreed-upon authenticated source; or (b) the signing party's digital signature executed using Net2Phone's digital signature service provider and digital signature process.

Business/Company Name
Town of Paonia

By: Stefen Wynn

Title: Town Administrator

Date: 02/05/2026

Exhibit A

Equipment

14 x Yealink SIP-T44W 12-Line WiFi IP Phone with Power Supply Rental

1 x Yealink CP935W Wireless Touch-Sensitive Conference Phone with Base Rental

Business/Company Name: Town of Paonia

Sign:

By: Stefen Wynn

Title: Town Administrator

Date: 02/05/2026

Commitment Agreement – 36 Months

The terms and conditions set forth below in this Commitment Agreement-36 Months are in addition to the Terms of Service that You agreed to at **https://www.net2phone.com/terms-of-service** which Terms of Service are incorporated herein by reference.

You are purchasing the equipment listed on Exhibit A attached hereto ("Equipment"), if any, and Net2Phone is allowing You to pay for such Equipment over the course of 36 months at the monthly rate set forth on Exhibit A, plus applicable taxes and fees. Except as otherwise set forth herein, You shall be liable to pay the full value of the remaining amount due for the Equipment (as determined by Net2Phone) plus applicable taxes if the Equipment is lost, stolen or damaged. During the term of this agreement: (i) You shall inform Net2Phone, upon demand, of the exact location of the Equipment while it is in Your possession; (ii) You shall keep the Equipment in a good state of condition; (iii) You shall not lease, rent or sell the Equipment to any third party; and (iv) You shall not pledge or encumber the Equipment in any way. Net2Phone may terminate this agreement immediately upon Your failure to make payment for the Equipment and/or the Service when due, or upon your violation of this agreement and/or the Terms of Service. You agree that, in such event, or in the event You decide to cancel the Service*[1] Net2Phone shall calculate the remaining amount due for the Equipment (as of the date of termination) and such amount shall become immediately due and payable by You to Net2Phone.

EACH PIECE OF EQUIPMENT IS PROVIDED "AS IS" AND NET2PHONE MAKES NO WARRANTIES AND DISCLAIMS ALL WARRANTIES, WHETHER EXPRESS OR IMPLIED, INCLUDING, BUT NOT LIMITED TO, ANY IMPLIED WARRANTIES OF MERCHANTABILITY, FITNESS FOR A PARTICULAR PURPOSE, OR NONINFRINGEMENT WHETHER SAID WARRANTY ARISES UNDER PROVISIONS OF ANY LAW OF THE UNITED STATES OR ANY STATE THEREOF. SOME JURISDICTIONS DO NOT PERMIT THE DISCLAIMER OF CERTAIN IMPLIED WARRANTIES, SO CERTAIN OF THE FOREGOING DISCLAIMERS MAY NOT APPLY TO YOU. TO THE EXTENT THAT NET2PHONE CANNOT DISCLAIM ANY SUCH WARRANTY AS A MATTER OF APPLICABLE LAW, THE SCOPE AND DURATION OF SUCH WARRANTY WILL BE THE MINIMUM PERMITTED UNDER SUCH LAW.

Net2Phone will replace the Equipment with identical or similar Equipment if the Equipment fails to operate due to manufacturer defect or in accordance with the manufacturer's specifications and operation instructions -- so long as the manufacturer's warranty is still in effect. Such replacement shall be made as soon as practicable after you return the non-conforming Equipment in accordance with the RMA instructions set forth in the Terms of Service. All Equipment returns that do not conform to the restrictions/procedures set forth in this agreement, the Terms of Service and/or the RMA process may also be subject to certain fees as set forth in the Terms of Service. You also agree that Equipment returns may be subject to a re-stocking fee as set forth in the Terms of Service.

---

[1]*For purposes of this agreement, the Service is deemed "canceled" if You cancel 20% or more of the aggregate number of plans or channels (as applicable) registered to You.

You agree to purchase the services set forth in the quote associated with this agreement (the "Service") for a minimum period of 36 months from the Service Date ("Minimum Period"); provided that if the Service Date is delayed, then the Minimum Period will be extended to match the number of days of such delay.

At the conclusion of the Minimum Period, if not earlier terminated in accordance with the terms of this agreement or the Terms of Service: (i) the Service term will expire if You have elected not to renew the Service term via notice to Net2Phone at least thirty (30) days prior to the end of the Minimum Period; (ii) the Service term will automatically renew for successive thirty day renewal terms if You have so elected via notice to Net2Phone at least thirty (30) days prior to the end of the Minimum Period; or (iii) the Service term will automatically renew for successive 36 month terms if neither of the foregoing applies (each such successive 36 month period referred to as a "Renewal Commitment Period") until You provide notice to Net2Phone at least thirty (30) days prior to the end of the applicable Renewal Commitment Period that You do not wish to renew the Service for another Renewal Commitment Period. In those states and jurisdictions that do not allow automatic renewals of certain service agreements, the foregoing auto-renewal terms will not apply to You. In that event, after the Minimum Period, there is no Renewal Commitment Period and the Service term will continue until canceled by either party at any time upon prior written notice. IN ORDER TO BE VALID, ANY CANCELLATION/NON-RENEWAL OF SERVICES BY YOU OR ELECTION OF A MONTH-TO-MONTH TERM (PURSUANT TO THIS PARAGRAPH), MUST BE MADE IN WRITING AND SENT TO CANCEL@NET2PHONE.COM.

If Net2Phone terminates this agreement prior to the end of the Minimum Period as a result of Your failure to make payment for the Equipment and/or the Service when due or upon your violation of this agreement and/or the Terms of Service; or if You decide to cancel the Service prior to the end of the Minimum Period, then You shall be responsible to pay an early termination fee $100 per plan or channel (as applicable).

You shall pay all reasonable attorney and other fees, expenses and costs incurred by Net2Phone in protecting its rights under this agreement and for any action taken by Net2Phone to collect any amounts due to Net2Phone under this agreement.

This agreement is binding on You upon Your signature below. No countersignature by Net2Phone is required. This agreement, as executed, may be delivered by facsimile transmission, by electronic mail, or by other electronic transmission, and may be transmitted in portable document format (.pdf) or other electronic or facsimile format. Each such executed facsimile, .pdf, or other electronic record shall be considered an original executed counterpart for purposes of this agreement. You (i) agree that You will be bound by Your own Electronic Signature (as such term is defined immediately below), (ii) accept the Electronic Signature by Net2Phone (if any) to this agreement, and (iii) agree that such Electronic

Signatures shall be the legal equivalent of manual signatures. The term "Electronic Signature" means (a) the signing party's manual signature on a signature page, converted by the signing party to facsimile or digital form (such as a .pdf file) and received from the signing party's customary email address, customary facsimile number, or other mutually agreed-upon authenticated source; or (b) the signing party's digital signature executed using Net2Phone's digital signature service provider and digital signature process.

Business/Company Name
Town of Paonia

By: Stefen Wynn

Title: Town Administrator

Date: 02/05/2026

Exhibit A

Equipment

Business/Company Name: Town of Paonia

Sign:

By: Stefen Wynn

Title: Town Administrator

Date: 02/05/2026

TOWN OF PAONIA
BOARD OF TRUSTEES MEETING
STAFF REPORT

AGENDA ITEM:	Mayor & Trustee Reports: Ad Hoc Short Term Rentals Committee
SUBMITTED BY:	Daoine Bachran, Utility Billing & Permit Coordinator
DATE:	2-10-26
SUMMARY:	18 Respondants 1/3 from in town, 2/3 from out of town 1/3 own STRs, 2/3 do not Overall, the survey responses reflect a community that is deeply engaged and sharply divided on how short-term rentals (STRs) should be handled in Paonia. Many respondents support STRs as an important economic and housing tool, particularly for local or part-time residents who use STR income to remain homeowners amid rising costs, support retirement, or accommodate temporary workers and festival-driven tourism. Several commenters emphasized that Paonia is not a resort town and warned against importing overly complex or heavy-handed regulations from places like Vail or Crested Butte. A recurring theme among STR-supportive responses is respect for property rights and voter intent. These respondents argue that regulation should be simple, light-touched, and focused on mitigating real impacts (such as noise) rather than limiting numbers, locations, or imposing costly licensing that could push residents out or reduce lodging capacity. Some also suggested alternative approaches, such as limiting the number of licenses per owner rather than creating multiple STR categories and distinguishing between local owners with community ties and purely absentee investment properties. At the same time, a substantial number of respondents expressed concern that STRs function as de facto lodging businesses in residential zones, creating inequities, neighborhood disruption, and long-term housing pressure. These

	commenters raised issues of fairness and enforcement, noting that traditional lodging businesses pay higher taxes, utilities, insurance, and licensing costs, while residential STRs often do not, despite similar impacts. Concerns included loss of neighborhood cohesion, increased noise, traffic, parking, water use, and liability risks, as well as the broader commodification of housing that can price out local workers. Several respondents supported stronger regulation, business licensing, fees, insurance requirements, and clear distinctions between occasional, owner-occupied rentals and full-time, non-owner-occupied STRs. Others emphasized the need for transparency, accessibility, and inclusive public engagement in the process, including meeting transcripts and broader outreach beyond online platforms. Taken together, the responses suggest that the core challenge for the committee is not whether STRs should exist, but how to balance local housing needs, economic benefits, property rights, neighborhood stability, and fairness between residential STRs and traditional lodging businesses in a way that reflects Paonia.